Workshop Manual

Polo 1995 ➤

Brake systems

Edition 05.2006

Protected by copyright. Copying for private or commercial purposes, in part or in whole, is not permitted unless authorised by Volkswagen AG. Volkswagen AG does not guarantee or accept any liability with respect to the correctness of information in this document. Copyright by Volkswagen AG.

satelettronica

List of Workshop Manual Repair Groups

Repair Group

00 - Technical data
45 - Anti-lock brake system
46 - Brakes - mechanism
47 - Brakes - hydraulics

Protected by copyright. Copying for private or commercial purposes, in part or in whole, is not permitted unless authorised by Volkswagen AG. Volkswagen AG does not guarantee or accept any liability with respect to the correctness of information in this document. Copyright by Volkswagen AG.

satelettronica

Technical information should always be available to the foremen and mechanics, because their careful and constant adherence to the instructions is essential to ensure vehicle road-worthiness and safety. In addition, the normal basic safety precautions for working on motor vehicles must, as a matter of course, be observed.

All rights reserved.
No reproduction without prior agreement from publisher.

Copyright © 2015 Volkswagen AG, Wolfsburg

00050207120

Contents

00 - Technical data . . . 1

1 Technical data . . . 1
1.1 Brakes ‣ 09.99 . . . 1
1.2 Brakes 10.99 ‣ . . . 5
2 Brake test . . . 8
2.1 General . . . 8
2.2 Test for vehicles with front-wheel drive. . . . 8

45 - Anti-lock brake system . . . 9

1 Anti-lock brake system (ABS) ITT Mark 04 GI . . . 9
1.1 General information on this ABS . . . 9
1.2 Notes for repair work on the ABS . . . 9
2 Assembly overview - hydraulic unit, brake servo/brake master cylinder . . . 11
2.1 Connecting brake lines from tandem brake master cylinder to hydraulic unit . . . 12
2.2 Removing and installing control unit and hydraulic unit . . . 12
3 Anti-lock brake system (ABS) and anti-lock brake system with electronic differential lock (ABS/EDL) ITT Mark 20 GI and ITT Mark 20 IE . . . 16
3.1 General information on this ABS . . . 16
3.2 Distinguishing features of ABS ITT Mark 20 GI/ITT Mark 20 IE . . . 17
3.3 Notes for repairs on ABS, ABS/EDL . . . 17
4 Assembly overview - hydraulic unit, brake servo/brake master cylinder . . . 19
4.1 Removing and installing control unit and hydraulic unit . . . 19
5 Removing and installing parts of ABS system on front and rear axles . . . 23
5.1 Removing and installing parts of ABS system on front axle, VW I brake caliper . . . 23
5.2 Removing and installing parts of ABS system on front axle, VW II brake caliper . . . 26
5.3 Removing and installing parts of ABS system on front axle, Girling/Lucas brake caliper . . . 30
5.4 Removing and installing parts of ABS system on rear axle (vehicles with drum brakes) . . . 34
5.5 Removing and installing parts of ABS system on rear axle (vehicles with disc brakes) . . . 38
6 Removing and installing parts of ESP system . . . 43
6.1 Removing and installing yaw rate sender G202 . . . 43
6.2 Removing and installing lateral acceleration sender G200 . . . 44
6.3 Removing and installing steering angle sender G85 . . . 45

46 - Brakes - mechanism . . . 46

1 Repairing front brakes . . . 46
1.1 Repairing front brakes, VW I and VW II brake caliper . . . 46
1.2 Removing and installing brake pads, up to 01.96 . . . 49
1.3 Removing and installing brake pads, from 01.96 . . . 51
1.4 Repairing Girling/Lucas front brakes . . . 53
1.5 Removing and installing brake pads, Girling/Lucas brake caliper . . . 55
2 Repairing rear brakes, drum brakes . . . 58
2.1 Removing and installing brake drum, up to 09.99 . . . 58
2.2 Removing and installing brake drum, as of 10.99 . . . 60
2.3 Releasing brake shoe adjustment . . . 61
2.4 Repairing brake drum . . . 61
2.5 Removing and installing brake shoes . . . 63
2.6 Adjusting handbrake . . . 64
3 Repairing rear brakes (disc brakes) . . . 66
3.1 Removing and installing disc brake . . . 66
3.2 Removing and installing brake pads . . . 69
3.3 Adjusting handbrake . . . 72
4 Removing and installing handbrake cable (drum brakes) . . . 73

satelettronica

5 Removing and installing handbrake cable (disc brakes) . . . 75
6 Assembly overview - handbrake lever . . . 77
7 Assembly overview - brake pedal . . . 78
7.1 Separating brake pedal from brake servo . . . 78
7.2 Removing and installing brake pedal . . . 79
7.3 Adjusting brake light switch . . . 80

47 - Brakes - hydraulics . . . 82
1 Repairing front brake caliper, VW I and VW II brake caliper . . . 82
1.1 Removing and installing piston for front brake caliper . . . 82
2 Repairing Girling/Lucas front brake caliper . . . 85
2.1 Removing and installing piston for front brake caliper . . . 85
3 Repairing rear brake caliper . . . 88
3.1 Removing and installing piston for rear brake caliper . . . 89
3.2 Pressure leak test . . . 91
4 Assembly overview - brake pressure regulator . . . 92
5 Checking and adjusting brake pressure regulator . . . 93
5.1 Checking and adjusting pressure . . . 93
5.2 Load dependent brake pressure regulator specifications . . . 93
6 Bleeding brake system . . . 95
6.1 Bleeding brake system using brake filling and bleeding unit VAS 5234 or V.A.G 1869 . . . 95
6.2 Bleeding brake system without brake filling and bleeding unit . . . 96
6.3 Changing brake fluid . . . 96
7 Assembly overview - brake servo/ brake master cylinder . . . 97
7.1 Removing and installing vacuum pump for brake servo (diesel vehicles) . . . 98
7.2 Checking non-return valve . . . 99
8 Assembly overview - brake master cylinder/brake servo for vehicles with ABS/EDL/TCS/ESP . . . 100
8.1 Removing and installing brake pressure sender . . . 101
9 Removing and installing brake master cylinder . . . 103
9.1 Removing . . . 103
9.2 Installing . . . 103
10 Removing and installing brake servo . . . 104
10.1 Removing . . . 104
10.2 Installing . . . 105

Protected by copyright. Copying for private or commercial purposes, in part or in whole, is not permitted unless authorised by Volkswagen AG. Volkswagen AG does not guarantee or accept any liability with respect to the correctness of information in this document. Copyright by Volkswagen AG.
satelettronica

00 – Technical data

1 Technical data

1.1 Brakes ▸ 09.99

1.1.1 Vehicles with VW I front brake calipers

Vehicles to identity No. 6N SY 087 410 or 6N SW 008 500

Item	Displacement		1.05l, 1.3l
	Output	kW	33, 44
	Brake master cylinder	∅ in mm	20.64 22.20[1)]
	Brake servo	∅ in in-ches	8″ LHD vehicle with ABS 9″ RHD vehicle with ABS 8″
1	Brake caliper		VW I
2	Brake pad, thickness	mm	12
3	Brake disc	∅ in mm	239
	Brake disc, thickness	mm	10
4	Brake caliper, piston	∅ in mm	48

1) Vehicles with ABS

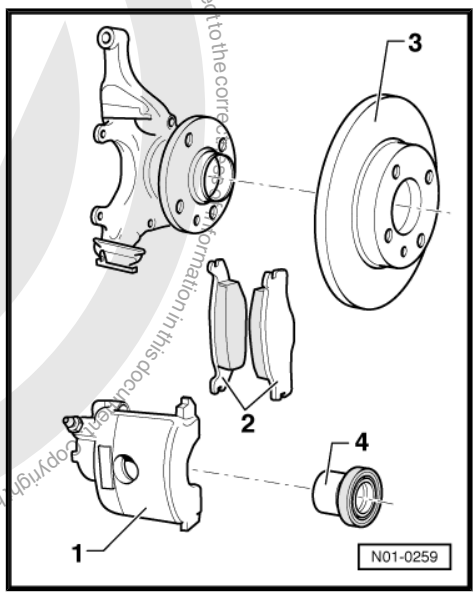

1.1.2 Vehicles with VW II front brake calipers with pads with retaining springs -5-

Vehicles from identity No. 6N SY 087 411 to 6N TY 140 000 or from 6N SW 008 501 to 6N TW 070 000

Item	Displacement		1.05l, 1.3l, 1.4l, 1.6l, 1.9l D and SDI
	Output	kW	33, 37, 44, 47 (D and SDI), 55
	Brake master cylinder	∅ in mm	20.64 22.20[2)]
	Brake servo	∅ in in-ches	8″ LHD vehicle with ABS 9″ RHD vehicle with ABS 8″
1	Brake caliper		VW II
2	Brake pad, thickness	mm	12
3	Brake disc	∅ in mm	239
	Brake disc, thickness	mm	18
4	Brake caliper, piston	∅ in mm	48

2) Vehicles with ABS

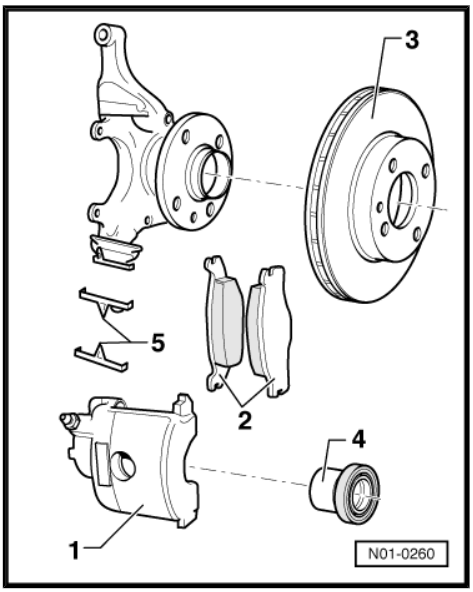

satelettronica

1.1.3 Vehicles with VW II front brake calipers

Vehicles from identity No. 6N TY 140 001 or from 6N TW 070 001

Item	Displacement		1.05l, 1.3l, 1.4l, 1.6l, 1.9l D and SDI
	Output	kW	33, 37, 44, 47 (D and SDI), 55
	Brake master cylinder	∅ in mm	20.64 22.20[3)]
	Brake servo	∅ in in-ches	8″ LHD vehicle with ABS 9″ RHD vehicle with ABS 8″
1	Brake caliper		VW II
2	Brake pad, thickness	mm	12
3	Brake disc	∅ in mm	239
	Brake disc, thickness	mm	18
4	Brake caliper, piston	∅ in mm	48

3) Vehicles with ABS

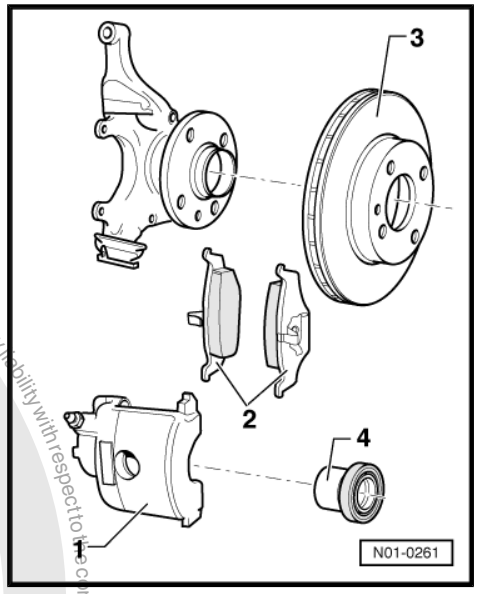

1.1.4 Vehicles with Girling/Lucas front brake calipers

Vehicles from identity No. 6N TW 100 001 or from 6N -VW 030-001 or from 6N VY 050 001

Item	Displacement		1.4l 16V
	Output	kW	74
	Brake master cylinder	∅ in mm	22.20 23.81[4)]
	Brake servo	∅ in in-ches	8″ LHD vehicle with ABS 9″ RHD vehicle with ABS 8″
1	Brake caliper		Girling/Lucas
2	Brake pad, thickness	mm	11
3	Brake disc	∅ in mm	256
	Brake disc, thickness	mm	20
4	Brake caliper, piston	∅ in mm	54

4) Vehicles with ABS

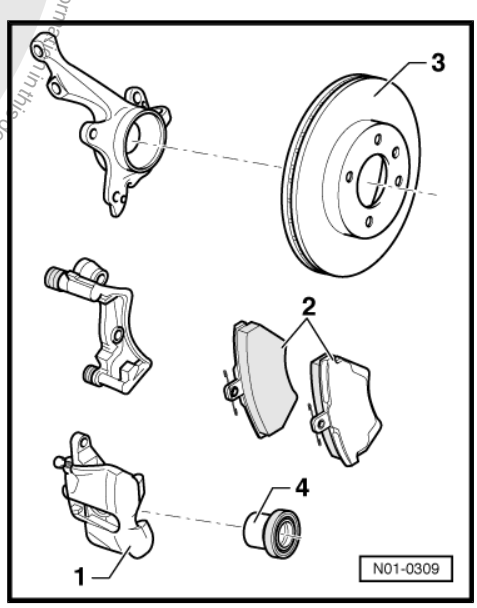

Copyright by Volkswagen AG. Volkswagen AG does not guarantee or accept any liability with respect to the correctness of information in this document. Copying for private or commercial purposes, in part or in whole, is not permitted unless authorised by Volkswagen AG.
satelettronica

1.1.5 Vehicles with Lucas front brake calipers

Vehicles from identity No. 6N WW 260 001 or from 6N WY 280 001

Item	Displacement		1.6l 16V
	Output	kW	88
	Brake master cylinder	∅ in mm	22.20 23.81[5)]
	Brake servo	∅ in in-ches	8″ LHD vehicle with ABS 9″ RHD vehicle with ABS 8″
1	Brake caliper		Lucas
2	Brake pad, thickness	mm	11
3	Brake disc	∅ in mm	256
	Brake disc, thickness	mm	25
4	Brake caliper, piston	∅ in mm	54

5) Vehicles with ABS

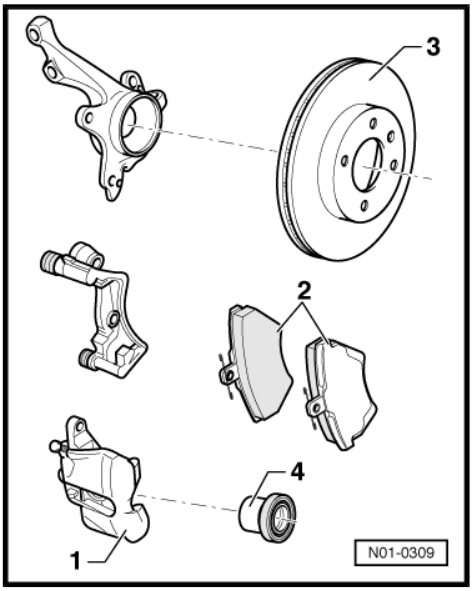

1.1.6 Vehicles with rear drum brakes

Vehicles with this version of rear drum brake are generally fitted with VW I or VW II calipers for the front brakes ⇒ from page ⇒ page 1 .

Item	Displacement		1.05l, 1.3l, 1.4l, 1.6l, 1.9l D and SDI
	Output	kW	33, 37, 44, 47 (D and SDI), 55
	Brake master cylinder	∅ in mm	20.64 22.20[6)]
	Brake servo	∅ in in-ches	8″ LHD vehicle with ABS 9″ RHD vehicle with ABS 8″
1	Wheel cylinder	∅ in mm	17.46
2	Brake pad, thickness	mm	5
	Brake lining, width	mm	30/ 40[7)]
3	Brake drum	∅ in mm	180/ 200[6)]

6) Vehicles with ABS

7) Vehicles with 200 mm ∅ brake drum

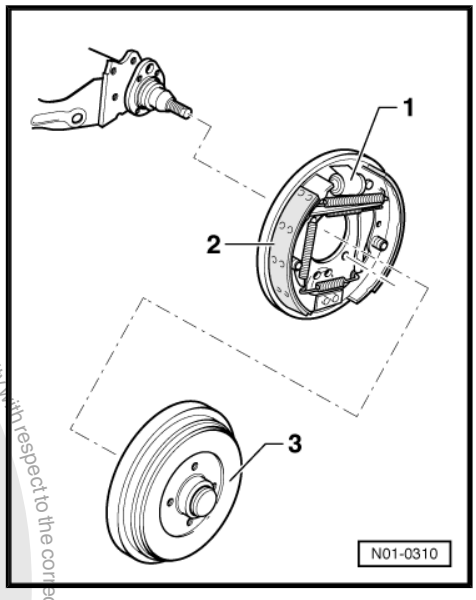

Protected by copyright. Copying for private or commercial purposes, in part or in whole, is not permitted unless authorised by Volkswagen AG. Volkswagen AG does not guarantee or accept any liability with respect to the correctness of information in this document. Copyright by Volkswagen AG.
satelettronica

1.1.7 Vehicles with rear drum brakes

Vehicles with this version of rear drum brake are generally fitted with Girling or Lucas calipers for the front brakes ⇒ from page ⇒ page 2 .

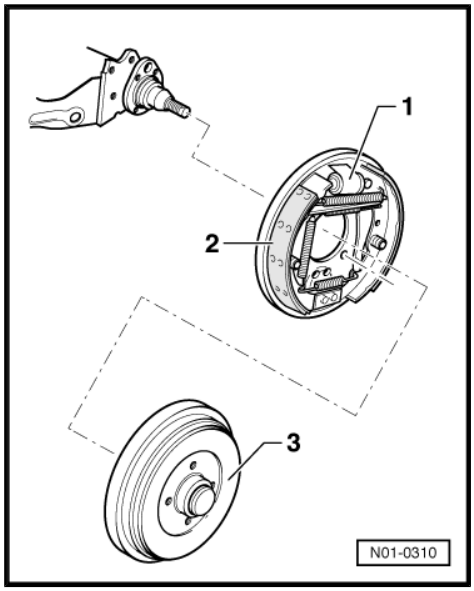

Item	Displacement		1.4l 16 V
	Output	kW	74
	Brake master cylinder	∅ in mm	22.20 23.81[8)]
	Brake servo	∅ in in-ches	8″ LHD vehicle with ABS 9″ RHD vehicle with ABS 8″
1	Wheel cylinder	∅ in mm	17.46
2	Brake pad, thickness	mm	5
	Brake lining, width	mm	30/ 40[9)]
3	Brake drum	∅ in mm	180/ 200[8)]

8) Vehicles with ABS

9) Vehicles with 200 mm ∅ brake drum

1.1.8 Vehicles with rear disc brakes

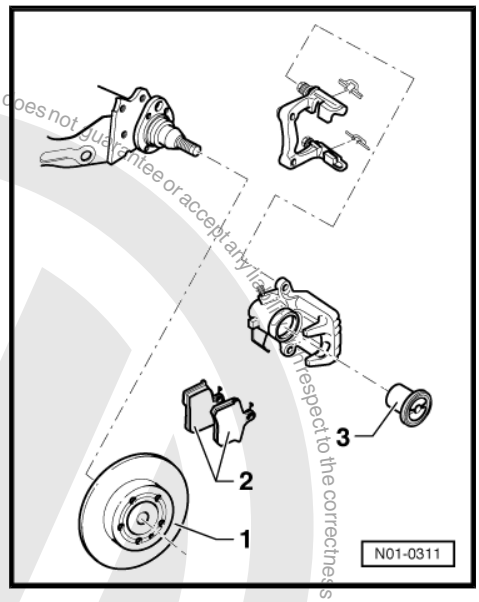

Item	Displacement		1.4l 16 V, 1.6l 16 V
	Output	kW	74, 88
	Brake master cylinder	∅ in mm	22.20 23.81[10)]
	Brake servo	∅ in in-ches	8″ LHD vehicle with ABS 9″ RHD vehicle with ABS 8″
1	Brake disc	∅ in mm	226
	Brake disc, thickness	mm	10
2	Brake pad, thickness	mm	12
3	Brake caliper, piston	∅ in mm	38

10) Vehicles with ABS

Protected by copyright. Copying for private or commercial purposes, in part or in whole, is not permitted unless authorised by Volkswagen AG. Volkswagen AG does not guarantee or accept any liability with respect to the correctness of information in this document. Copyright by Volkswagen AG.
satelettronica

1.2 Brakes 10.99 ▸

1.2.1 Vehicles with VW II front brake calipers

Item	Displacement		1.0l, 1.4l, 1.7l SDI and 1.9 l D
	Output	kW	37, 44, 44 (SDI), 47 (D), 55 (with no ABS)
	Brake master cylinder	∅ in mm	20.64 22.22[11)]
	Brake servo	∅ in in-ches	8″ LHD vehicle with ABS 9″ RHD vehicle with ABS 8″
1	Brake caliper		VW II
2	Brake pad, thickness	mm	12
3	Brake disc	∅ in mm	239
	Brake disc, thickness	mm	18
4	Brake caliper, piston	∅ in mm	48

11) Vehicles with ABS

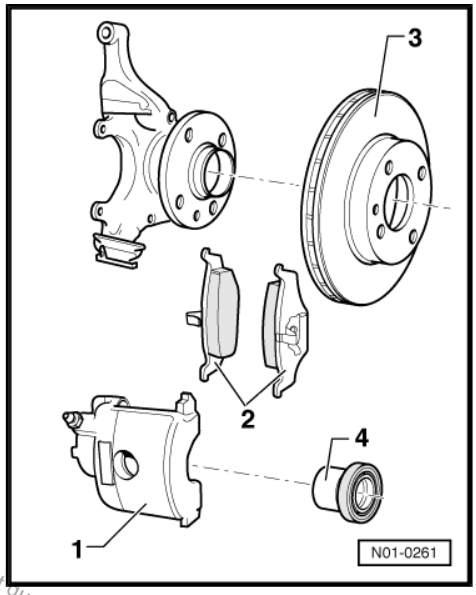

1.2.2 Vehicles with Lucas front brake calipers

Item	Displacement		1.4l
	Output	kW	55 (with ABS) 55 (TDI), 74
	Brake master cylinder	∅ in mm	22.22[12)] 23.81[13)]
	Brake servo	∅ in in-ches	LHD 9″ RHD 8″
1	Brake caliper		Lucas
2	Brake pad, thickness	mm	11
3	Brake disc	∅ in mm	256
	Brake disc, thickness	mm	20
4	Brake caliper, piston	∅ in mm	54

12) Vehicles with no ABS and right-hand drive with ABS

13) Vehicles with ABS

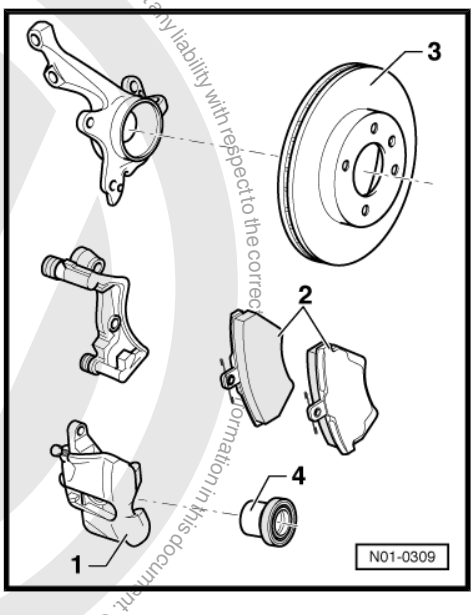

Protected by copyright. Copyright by Volkswagen AG. Volkswagen AG does not guarantee or accept any liability with respect to the correctness of information in this document. Copyright by Volkswagen AG. Reproduction, in part or in whole, is permitted unless authorised by Volkswagen AG. Volkswagen AG does not guarantee or accept any liability with respect to the correctness of information in this document. Copyright by Volkswagen AG.
satelettronica

1.2.3 Vehicles with Lucas front brake calipers

Item	Displacement		1.6l
	Output	kW	92
	Brake master cylinder	∅ in mm	22.22[14)] 23.81
	Brake servo	∅ in in-ches	LHD 9″ RHD 8″
1	Brake caliper		Lucas
2	Brake pad, thickness	mm	11
3	Brake disc	∅ in mm	256
	Brake disc, thickness	mm	25
4	Brake caliper, piston	∅ in mm	54

14) Right-hand drive (RHD)

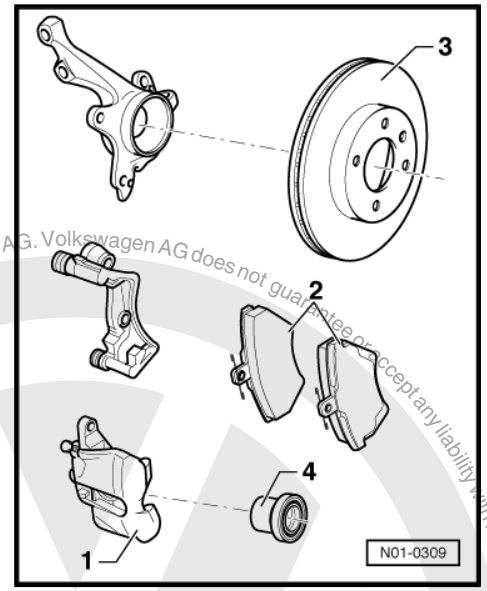

1.2.4 Vehicles with rear drum brakes

Item	Displacement		1.0l, 1.4l, 1.4l (TDI), 1.7l SDI, 1.9l D
	Output	kW	37, 44, 44 (SDI), 47 -D-; 55 + 55 (TDI) with no ABS
1	Wheel cylinder	∅ in mm	17.46 19.05 (1.4 l TDI)
2	Brake pad, thickness	mm	5
	Brake lining, width	mm	40
3	Brake drum	∅ in mm	200

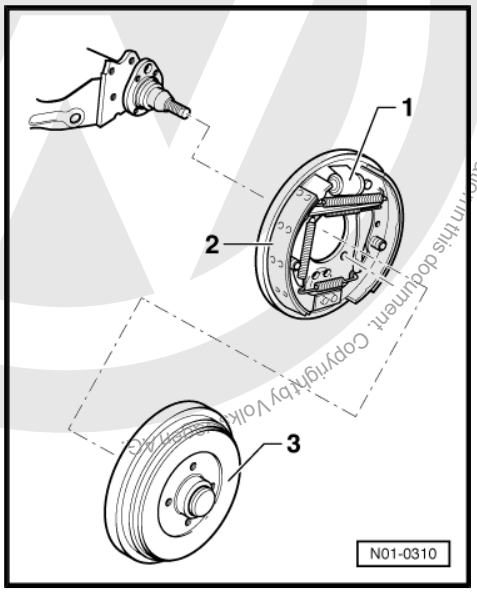

Protected by copyright. Copying for private or commercial purposes, in part or in whole, is not permitted unless authorised by Volkswagen AG. Volkswagen AG does not guarantee or accept any liability with respect to the correctness of information in this document. Copyright by Volkswagen AG.
satelettronica

1.2.5 Vehicles with rear disc brakes

Item	Displacement		1.4l, 1.4l (TDI), 1.6l
	Output	kW	55 + 55 (TDI) with ABS, 74, 92
1	Brake disc	∅ in mm	232
	Brake disc, thickness	mm	9
2	Brake pad, thickness	mm	12
3	Brake caliper, piston	∅ in mm	34

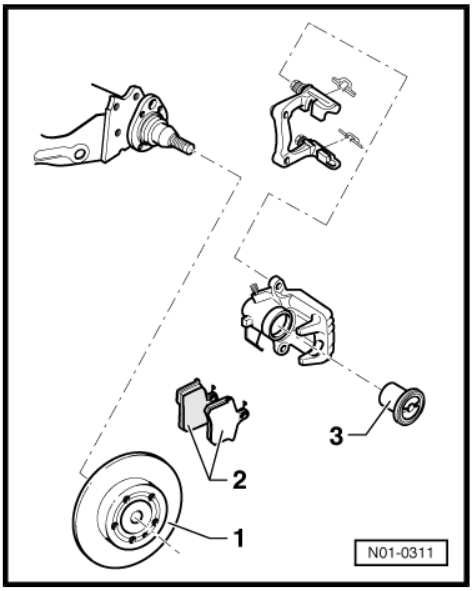

Protected by copyright. Copying for private or commercial purposes, in part or in whole, is not permitted unless authorised by Volkswagen AG. Volkswagen AG does not guarantee or accept any liability with respect to the correctness of information in this document. Copyright by Volkswagen AG.

satelettronica

2 Brake test

2.1 General

- The wheels are driven by the brake test rollers.
- For the test, ensure that for vehicles with a manual gearbox the gearstick is in neutral and for vehicles with an automatic gearbox the shift lever is in “N”.
- Follow the instructions provided by the manufacturer of the brake test equipment when performing the test.

Note

Electronic brake control systems are inoperative when the ignition is switched off.

2.2 Test for vehicles with front-wheel drive.

The brake test must be performed on a single-axle rolling road.

The maximum test speed must not exceed 6 km/h.

The test rigs authorised by Volkswagen fulfil these requirements.

Protected by copyright. Copying for private or commercial purposes, in part or in whole, is not permitted unless authorised by Volkswagen AG. Volkswagen AG does not guarantee or accept any liability with respect to the correctness of information in this document. Copyright by Volkswagen AG.
satelettronica

45 – Anti-lock brake system

1 Anti-lock brake system (ABS) ITT Mark 04 GI

1.1 General information on this ABS

The designation “Teves 04 GI” is discontinued for this ABS. The new designation is “ITT Mark 04 GI”.

ABS layout in left-hand drive vehicle.

The ABS brake system is divided diagonally. The brake servo assistance is provided pneumatically by the vacuum brake servo unit.

The hydraulic unit and control unit form one unit and must always be removed and installed jointly. They can be separated only when removed.

Vehicles with ABS are not fitted with a mechanical brake pressure regulator. Specially matched software in the control unit regulates the rear axle brake pressure distribution.

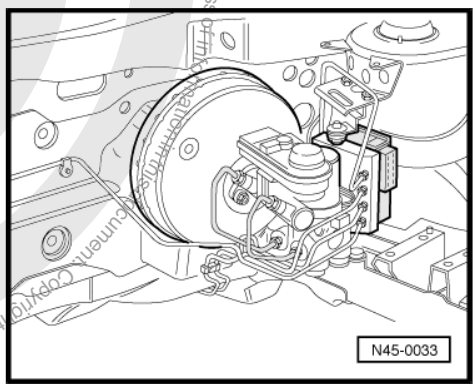

ABS layout in a right-hand drive vehicle.

New control units from the replacement parts service are not co-ded. They must be coded once installed

Malfunctions in the ABS system do not influence the brake system and servo. The conventional braking system remains functional even without ABS.

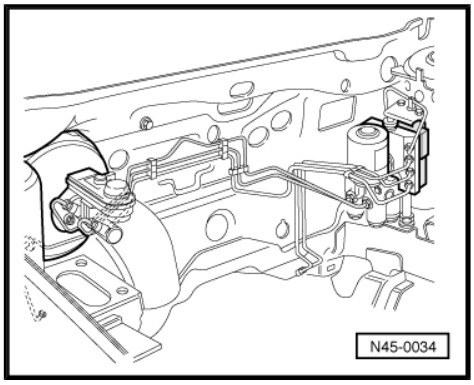

1.2 Notes for repair work on the ABS

- Before carrying out repair work on the anti-lock brake system, determine the cause of the problem with the self-diagnosis ⇒ Running gear; self-diagnosis for ABS; Rep. Gr. 01 ; Performing self-diagnosis .
- Before working on ABS, disconnect the battery earth strap. Obtain radio code on vehicles with coded radio.
- Before carrying out welding work with an electric welding unit, note ⇒ General Information; Body Repairs, General Body Repairs .
- When working with brake fluid, observe the valid, relevant safety precautions and notes ⇒ page 95 .
- After work for which the brake system had to be opened, bleed the brake system with brake filling and bleeding unit - V.A.G 1869- ⇒ page 95 .
- During a concluding road test, ensure that a regulated brake test takes place at least once (pulsations must be felt at the brake pedal).

Protected by copyright. Copying for private or commercial purposes, in part or in whole, is not permitted unless authorised by Volkswagen AG. Volkswagen AG does not guarantee or accept any liability with respect to the correctness of information in this document. Copyright by Volkswagen AG.
satelettronica

- Absolute cleanliness is required when working on the anti-lock brake system; avoid any products that contain mineral oil, such as oil, grease, etc.
- Thoroughly clean all connections and the adjacent areas before loosening; do not use harsh cleaning agents such as brake cleaner, fuel, thinners or similar.
- Place removed parts on a clean surface and cover them up.
- After separating the control unit/hydraulic unit use the transportation protection for the valve contact pin.
- Only use lint-free cloths.
- If repairs cannot be carried out immediately, carefully cover or seal open components. (Use sealing plugs from repair kit 1 H0 698 311 A).
- Only remove replacement parts from packaging immediately prior to installation.
- Only use genuine spare parts from original packaging.
- When the system is open do not work with compressed air and do not move the vehicle.
- Ensure that no brake fluid enters electrical connectors.

Protected by copyright. Copying for private or commercial purposes, in part or in whole, is not permitted unless authorised by Volkswagen AG. Volkswagen AG does not guarantee or accept any liability with respect to the correctness of information in this document. Copyright by Volkswagen AG.
satelettronica

2 Assembly overview - hydraulic unit, brake servo/brake master cylinder

This illustration is identical for LHD and RHD vehicles.

- The pump and valve block must not be separated from one another.

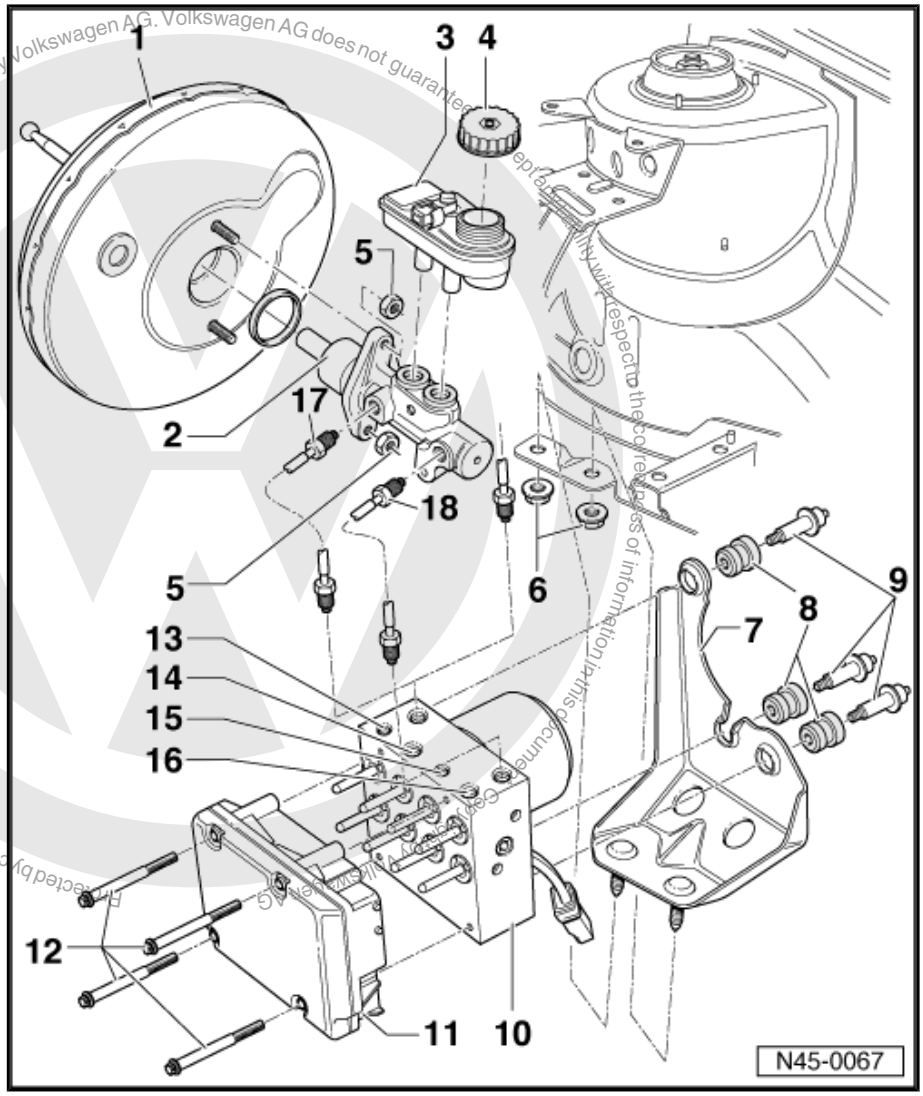

1 - Brake servo

2 - Tandem brake master cylinder

3 - Brake fluid reservoir

4 - Cap

5 - Self-locking nut, 25 Nm

6 - Self-locking nut, 20 Nm

7 - Bracket

8 - Rubber damper

9 - -T25- Torx socket head bolt, 8 Nm

10 - ABS hydraulic unit

11 - Control unit

12 - Bolt, Torx head E 5, 4 Nm

13 - Brake line connection

- ❑ Hydraulic unit to front right brake caliper

14 - Brake line connection

- ❑ Hydraulic unit to rear left wheel cylinder/brake caliper

15 - Brake line connection

- ❑ Hydraulic unit to rear right wheel cylinder/ brake caliper

16 - Brake line connection

- ❑ Hydraulic unit to front left brake caliper

17 - Brake line

- ❑ Brake master cylinder/primary piston circuit to hydraulic unit

18 - Brake line

- ❑ Brake master cylinder/secondary piston circuit to hydraulic unit

Protected by copyright. Copyright by Volkswagen AG. Volkswagen AG does not guarantee or accept any liability with respect to the correctness of information in this document. Copying for private or commercial purposes, in part or in whole, is not permitted unless authorised by Volkswagen AG.
satelettronica

2.1 Connecting brake lines from tandem brake master cylinder to hydraulic unit

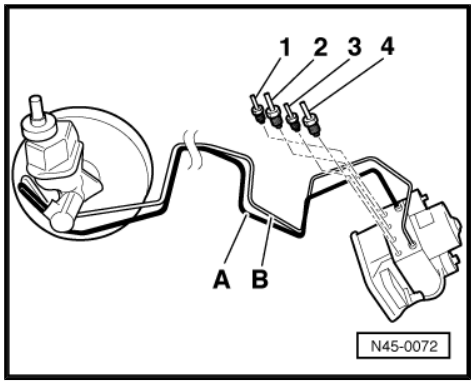

Vehicles with ABS

A - Secondary piston circuit.

B - Primary piston circuit.

1 - Hydraulic unit to front right brake caliper

2 - Hydraulic unit to rear left wheel cylinder/brake caliper

3 - Hydraulic unit to rear right wheel cylinder/brake caliper

4 - Hydraulic unit to front left brake caliper

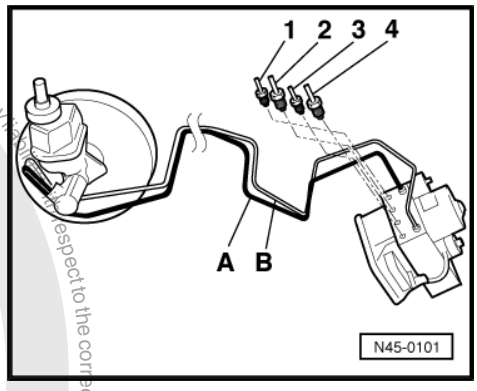

Vehicles with ABS/EDL

A - Secondary piston circuit.

B - Primary piston circuit.

1 - Hydraulic unit to front right brake caliper

2 - Hydraulic unit to rear left wheel cylinder/brake caliper

3 - Hydraulic unit to rear right wheel cylinder/brake caliper

4 - Hydraulic unit to front left brake caliper

2.2 Removing and installing control unit and hydraulic unit

Special tools and workshop equipment required

- Torque wrench -V.A.G 1331-
- Torque wrench -V.A.G 1410-
- Brake pedal depressor -V.A.G 1869/2-

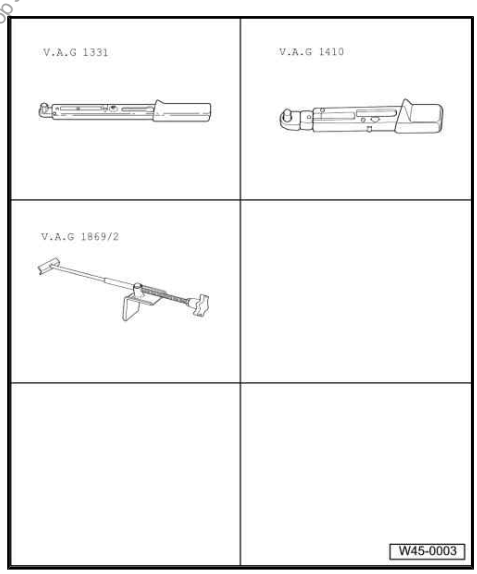

Protected by copyright. Copying for private or commercial purposes, in part or in whole, is not permitted unless authorised by Volkswagen AG. Volkswagen AG does not guarantee or accept any liability with respect to the correctness of information in this document. Copyright by Volkswagen AG.
satelettronica

Sealing plugs (repair kit)

The transport protection for the valve contact pin must always be placed on the hydraulic unit after the control unit has been disconnected from the hydraulic unit.

No warranty can be assumed for hydraulic units without transport protection for valve contact pin.

1 - Transport protection for valve contact pin (foam)

2 - Sealing plugs M 10

3 - Sealing plugs M 12

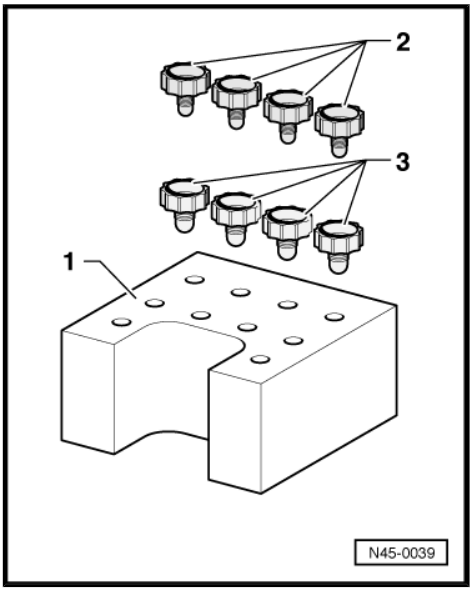

2.2.1 Removing

Location:

The control unit is bolted to the hydraulic unit and is located on left in the engine compartment.

> ⚠ **WARNING**
>
> ***Do not bend the brake lines in the area of the hydraulic unit!***

- Note or request radio code on vehicles with coded radio if necessary.
- Disconnect battery and remove.
- Remove expansion reservoir for coolant, unplug connector and swing to side.
- Release control unit connector -arrow 1- and pull off -arrow 2-.
- Draw off as much brake fluid as possible from brake fluid reservoir using a suction bottle.
- Fit brake pedal depressor from -V.A.G 1869/2- .
- Depress brake pedal with brake pedal depressor.
- Connect bleeder bottle hose to front left brake caliper bleed valve and open bleed valve.
- Close front left bleed valve.
- Place sufficient lint-free cloths under the control unit and hydraulic unit.

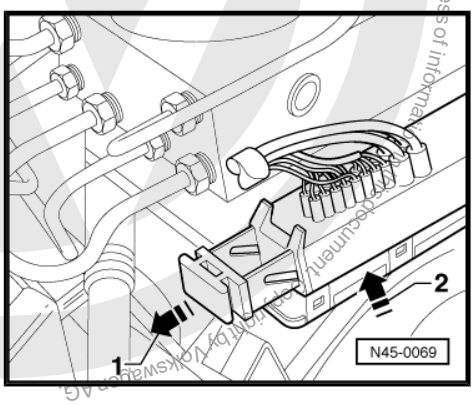

Ensure no brake fluid gets onto contacts.

satelettronica
Protected by copyright. Copyright. Copy, distribute and commercial purposes in part or in whole, is not permitted unless authorised by Volkswagen AG. Volkswagen AG does not guarantee or accept any liability with respect to the correctness of information in this document. Copyright by Volkswagen AG.

Protected by copyright. Copyright by Volkswagen AG. Volkswagen AG does not guarantee or accept any liability with respect to the correctness of information in this document. Copyright by Volkswagen AG. Protected by copyright. Copying for private or commercial purposes, in part or in whole, is not permitted unless authorised by Volkswagen AG.

– Unscrew both retainers -arrows- for clutch cable (danger of accident).
– Loosen nuts from bracket for control unit/hydraulic unit.
– Unbolt brake lines from hydraulic unit, and seal brake lines and threaded holes with plugs from repair kit Part No. 1H0 698 311 A.

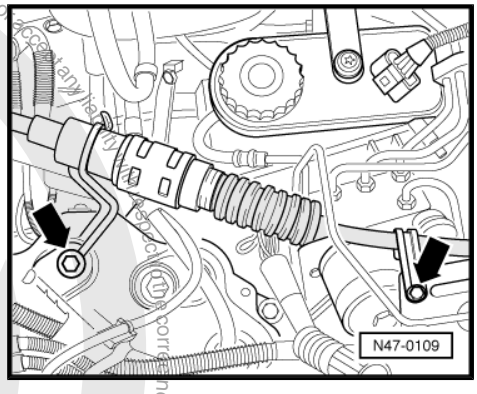

– Open bracket -arrow-, and unclip brake lines.
– Remove nuts from bracket for control unit/hydraulic unit.
– Remove ABS unit with bracket.

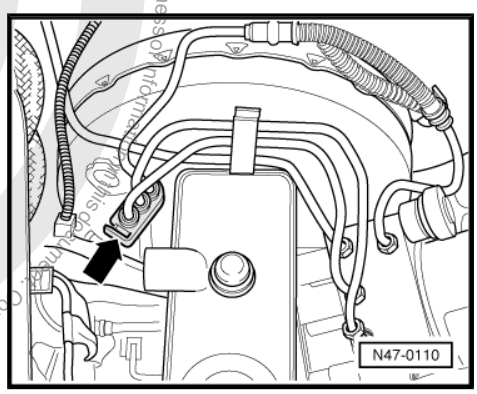

2.2.2 Unbolting control unit from hydraulic unit

– Unplug connector for hydraulic pump motor from control unit.
– Remove bracket from hydraulic unit.
– Remove Torx head bolts E5 -arrows- from control unit and pull control unit off.

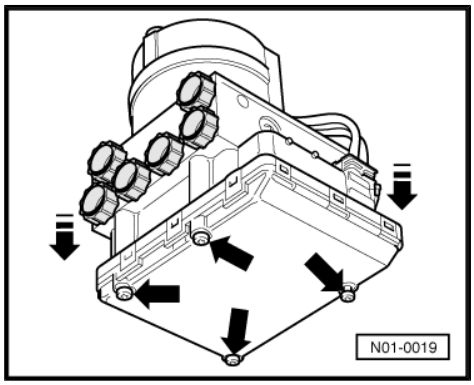

When pulling off the control unit, ensure that the hydraulic unit valve domes are not canted against the control unit solenoids.

Cover control unit solenoids with a lint-free cloth.

After disconnecting control unit and hydraulic unit, fit transportation protection for valve domes.

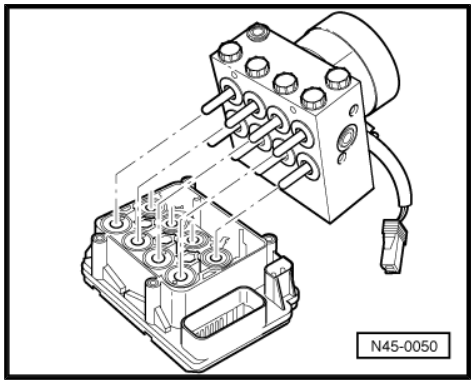

2.2.3 Installing

♦ Do not remove sealing plugs from new hydraulic unit until corresponding brake line is to be fitted.

satelettronica

- ♦ If sealing plugs are removed from hydraulic unit sooner, brake fluid may escape and it may no longer be possible to fill and bleed the unit properly.

When assembling control unit and hydraulic unit, ensure that the hydraulic unit contact pins are not canted against the control unit solenoid valves.

- – Using new bolts, screw control unit to hydraulic unit. Observe specified torque max. 4 Nm.
- – Reconnect connector for hydraulic pump motor.
- – Bolt ABS unit to bracket.
- – Insert ABS unit with bracket and bolt bracket to suspension strut turret.

Do not tighten bolts completely. This will make attaching the individual brake lines easier.

- – After tightening brake lines to hydraulic unit, tighten bracket.
- – Further installation is performed in reverse sequence.
- – Bleed brake system ⇒ page 95
- – Enter radio code.
- – Code control unit ⇒ Running gear; Self-diagnosis for ABS; Rep. Gr. 01 ; Performing self-diagnosis; Coding control unit .

Specified torques	
For LHD vehicles:	
Control unit to hydraulic unit	max. 4 Nm
Hydraulic unit hexagon bolt to bracket	8 Nm
Nut for tandem brake master cylinder to brake servo	25 Nm
Brake lines to ABS unit:	
Thread M 10 x 1	14 Nm
Thread M 12 x 1	14 Nm

Specified torques	
For RHD vehicles:	
Control unit to hydraulic unit	max. 4 Nm
Hydraulic unit hexagon bolt to bracket	8 Nm
Nut for tandem brake master cylinder to brake servo	25 Nm
Brake lines to ABS unit:	
Thread M 10 x 1	14 Nm
Thread M 12 x 1	14 Nm

Protected by copyright. Copyright Volkswagen AG.
Volkswagen AG does not guarantee or accept any liability with respect to the correctness of information in this document. Copyright Volkswagen AG.
satelettronica

3 Anti-lock brake system (ABS) and anti-lock brake system with electronic differential lock (ABS/EDL) ITT Mark 20 GI and ITT Mark 20 IE

Proprietary copyright. Copying for private or commercial purposes, in part or in whole, is not permitted unless authorised by Volkswagen AG. Volkswagen AG does not guarantee or accept any liability with respect to the correctness of information in this document. Copyright by Volkswagen AG.

3.1 General information on this ABS

The designation “Teves 20 GI” is discontinued for this ABS. The new designation is “ITT Mark 20 GI”.

As of 07. 97 (model year 98), the following ABS system was introduced:

ITT MARK 20 IE

Externally the ABS system is identical to the ITT Mark 20 GI system. The differences are in the control unit software ⇒ Running gear; Self-diagnosis for ABS; Rep. Gr. 01 .

ABS layout in left-hand drive vehicle.

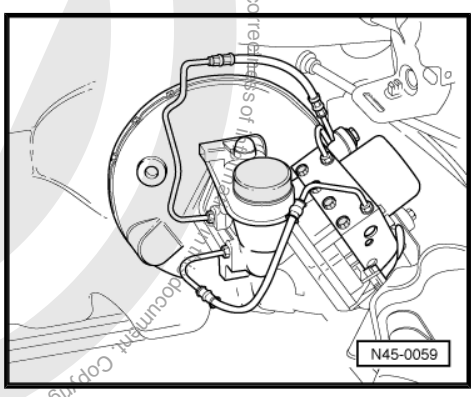

The ABS, ABS/EDL brake system is divided diagonally. The brake servo assistance is provided pneumatically by the vacuum brake servo unit.

ITT Mark 20 GI/ITT Mark 20 IE ABS and ABS/EDL models do not have a mechanical brake pressure regulator. Specially matched software in the control unit regulates the rear axle brake pressure distribution.

The hydraulic unit -a- and control unit -b- form one component. They can be separated only when removed.

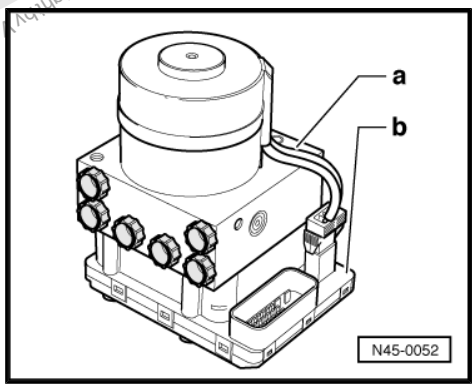

ABS layout in a right-hand drive vehicle.

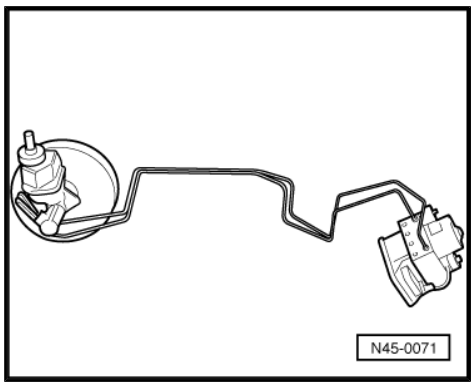

New control units from the replacement parts service are not coded. They must be coded once installed

Malfunctions in the ABS system do not influence the brake system and servo. The conventional braking system remains functional even without ABS.

satelettronica

Illustration shows ABS/EDL layout in left-hand drive vehicle.

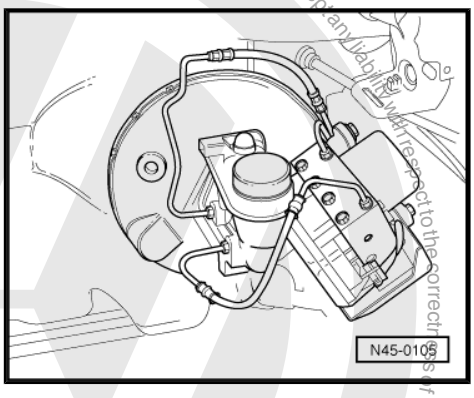

3.2 Distinguishing features of ABS ITT Mark 20 GI/ITT Mark 20 IE

3.2.1 I - ABS - ITT Mark 20 GI/ITT Mark 20 IE

Dimension a = 100 mm

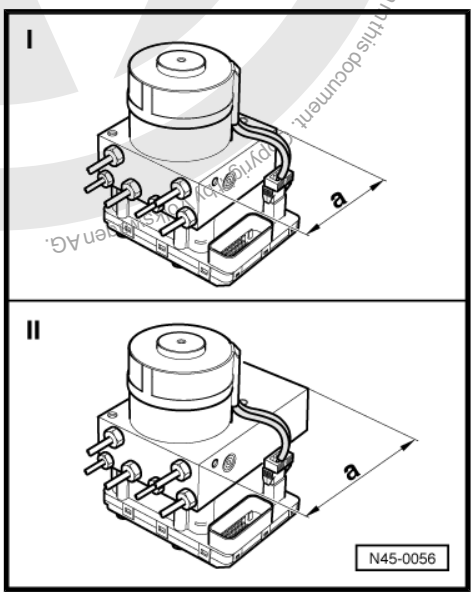

3.2.2 II - ABS/EDL - ITT Mark 20 GI/ITT Mark 20 IE

Dimension a = 130 mm

3.3 Notes for repairs on ABS, ABS/EDL

- Before carrying out repair work on the anti-lock brake system, determine the cause of the problem with the self-diagnosis ⇒ Running gear; self-diagnosis for ABS; Rep. Gr. 01 ; Performing self-diagnosis .
- Before working on ABS, disconnect the battery earth strap. Obtain radio code on vehicles with coded radio.
- Before carrying out welding work with an electric welding unit, note ⇒ General Information; Body Repairs, General Body Repairs .
- When working with brake fluid, observe the valid, relevant safety precautions and notes ⇒ page 95 .
- After work for which the brake system had to be opened, bleed the brake system with brake filling and bleeding unit - V.A.G 1869- ⇒ page 95 .
- During a concluding road test, ensure that a regulated brake test takes place at least once (pulsations must be felt at the brake pedal).

Protected by copyright. Copying for private or commercial purposes, in part or in whole, is not permitted unless authorised by Volkswagen AG. Volkswagen AG does not guarantee or accept any liability with respect to the correctness of information in this document.
satelettronica

- Absolute cleanliness is required when working on the anti-lock brake system; avoid any products that contain mineral oil, such as oil, grease, etc.
- Thoroughly clean all connections and the adjacent areas before loosening; do not use harsh cleaning agents such as brake cleaner, fuel, thinners or similar.
- Place removed parts on a clean surface and cover them up.
- After separating the control unit/hydraulic unit use the transportation protection for the valve contact pin.
- If repairs cannot be carried out immediately, carefully cover or seal open components. (Use sealing plugs from repair kit 1 H0 698 311 A).
- Only use lint-free cloths.
- Only remove replacement parts from packaging immediately prior to installation.
- Only use genuine spare parts from original packaging.
- When the system is open do not work with compressed air and do not move the vehicle.
- Ensure that no brake fluid enters electrical connectors.

Protected by copyright. Copying for private or commercial purposes, in part or in whole, is not permitted unless authorised by Volkswagen AG. Volkswagen AG does not guarantee or accept any liability with respect to the correctness of information in this document. Copyright by Volkswagen AG.
satelettronica

4 Assembly overview - hydraulic unit, brake servo/brake master cylinder

Volkswagen AG, Volkswagen AG does not guarantee or accept any liability with respect to the correctness of information in this document. Copyright by Volkswagen AG. Protected by copyright. Copying, printing or commercial purposes, in part or in whole, is not permitted unless authorised by

- The pump and valve block must not be separated from one another.

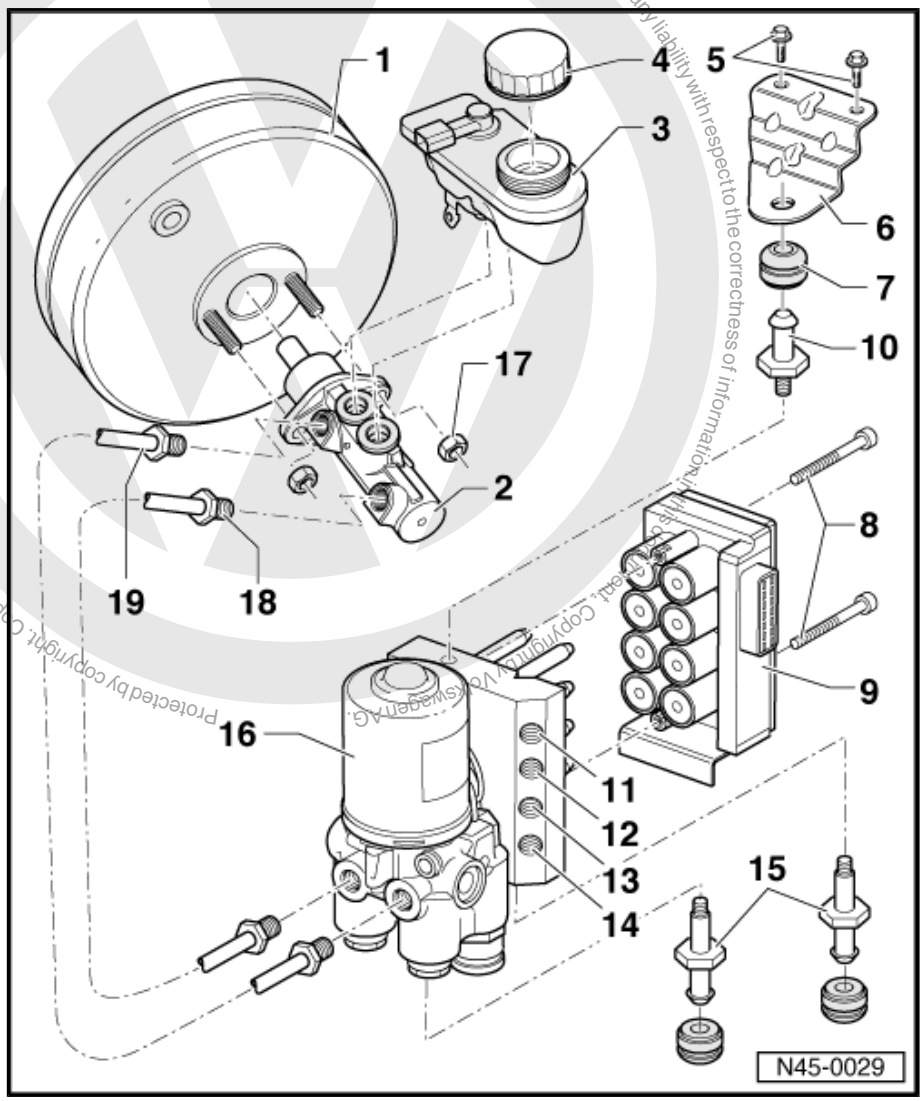

1 - Brake servo

2 - Tandem brake master cylinder

3 - Brake fluid reservoir

4 - Cap

5 - Hexagon bolt, 10 Nm

6 - Bracket

7 - Rubber damper

8 - Hexagon socket head bolt, 3 Nm

9 - Control unit

10 - Short bolt, 8 Nm

11 - Brake line connection
- ❑ Hydraulic unit to front left brake caliper

12 - Brake line connection
- ❑ Hydraulic unit to rear right wheel cylinder

13 - Brake line connection
- ❑ Hydraulic unit to rear left wheel cylinder

14 - Brake line connection
- ❑ Hydraulic unit to front right brake caliper

15 - Long bolt, 8 Nm

16 - ABS hydraulic unit

17 - Self-locking nut, 25 Nm

18 - Brake line
- ❑ Brake master cylinder/secondary piston circuit to hydraulic unit

19 - Brake line
- ❑ Brake master cylinder/primary piston circuit to hydraulic unit

4.1 Removing and installing control unit and hydraulic unit

Special tools and workshop equipment required

satelettronica

♦ Torque wrench -V.A.G 1410-

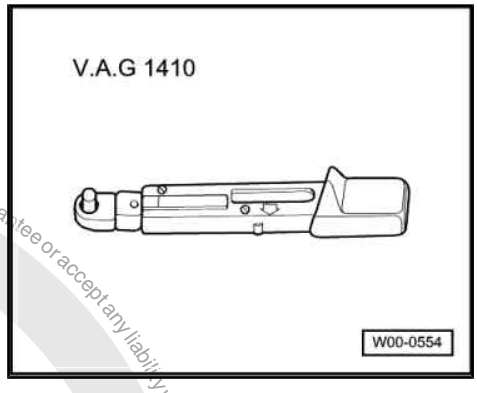

♦ Brake pedal depressor -V.A.G 1869/2-

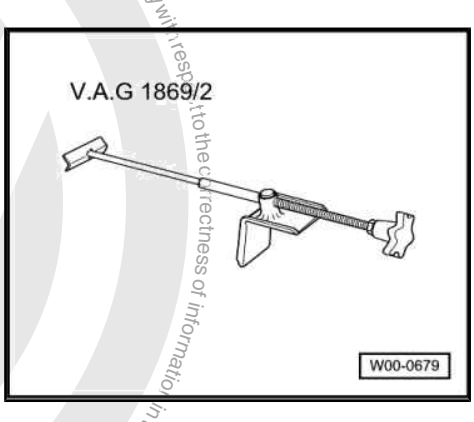

4.1.1 Removing

Location:

The control unit is bolted to the hydraulic unit and is located on left suspension strut turret in engine compartment.

WARNING

Do not bend the brake lines in the area of the hydraulic unit!

– Note or request radio code on vehicles with coded radio if necessary.
– Disconnect battery and remove.
– Unbolt coolant expansion tank and move to side.
– Take clutch cable out of bracket.

Protected by copyright. Copyright by Volkswagen AG. Volkswagen AG does not guarantee or accept any liability with respect to the correctness of information in this document. Copyright by Volkswagen AG. Not permitted unless authorised by Volkswagen AG. Not permitted for commercial purposes, in part or in whole.
satelettronica

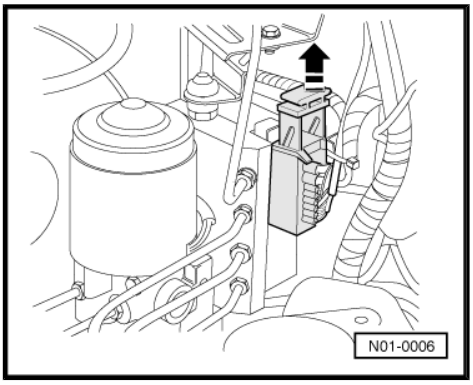

- Pull connector off control unit.
- Draw off as much brake fluid as possible from brake fluid reservoir using a suction bottle.
- Fit brake pedal depressor from -V.A.G 1869/2- .
- Depress brake pedal with brake pedal depressor.
- Connect bleed bottle hose to front left brake caliper bleed valve and open bleed valve.
- Close front left bleed valve.
- Place sufficient lint-free cloths under the control unit and hydraulic unit.

Ensure no brake fluid gets onto contacts.

- Unbolt brake lines from brake master cylinder and hydraulic unit, and seal brake lines and threaded holes with plugs from repair kit Part No. 1H0 698 311.
- Remove bolts on coolant expansion tank bracket.
- Remove hydraulic unit together with control unit.

4.1.2 Unbolting control unit from hydraulic unit

- Unscrew bolts -arrows- from control unit and pull control unit off.

When pulling off, ensure that the control unit is not tilted.

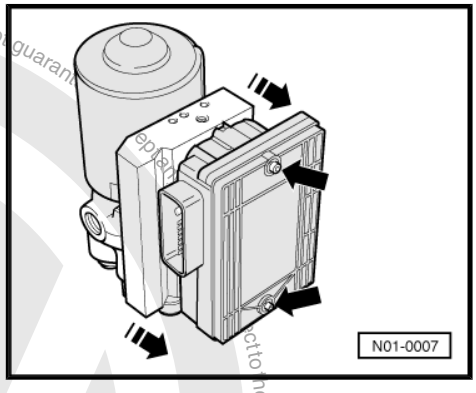

4.1.3 Installing

- ♦ Do not remove sealing plugs from hydraulic unit until corresponding brake line is fitted.
- ♦ If sealing plugs are removed from hydraulic unit sooner, brake fluid may escape and it may no longer be possible to fill and bleed the unit properly.
- Bolt control unit onto hydraulic unit. Observe specified torque: 3 Nm.
- Further installation is performed in reverse sequence.
- Bleed brake system ⇒ page 95
- Enter radio code.
- Code control unit ⇒ Running gear; Self-diagnosis for ABS; Rep. Gr. 01 ; Performing self-diagnosis; Coding control unit .

Specified torques	
Control unit to hydraulic unit	3 Nm
Bolts to bracket for coolant expansion tank	10 Nm
Brake lines to ABS unit:	
Thread M 10 x 1	14 Nm
Thread M 12 x 1	14 Nm

satelettronica

Specified torques

Damper bolt	8 Nm

Protected by copyright. Copying for private or commercial purposes, in part or in whole, is not permitted unless authorised by Volkswagen AG. Volkswagen AG does not guarantee or accept any liability with respect to the correctness of information in this document. Copyright by Volkswagen AG.

satelettronica

Protected by copyright. Copyright by Volkswagen AG. Volkswagen AG does not guarantee or accept any liability with respect to the correctness of information in this document. Copyright by Volkswagen AG.

5 Removing and installing parts of ABS system on front and rear axles

5.1 Removing and installing parts of ABS system on front axle, VW I brake caliper

1 - Hexagon socket head bolt, 10 Nm

2 - ABS speed sensor

- ❑ Before inserting sensor, clean inner surface of fitting hole and coat with lubricating paste G 000 650

3 - ABS speed sensor rotor

4 - Wheel hub

- ❑ Pressing out and in ⇒ Running gear, axles, steering; Rep. Gr. 40 ; Repairing front wheel suspension

5 - Cross-head screw

6 - Brake disc

- ❑ Never remove brake discs from wheel hub by force. If necessary use penetrating fluid, because otherwise brake discs can be damaged

7 - Cover plate

8 - Wheel bearing housing

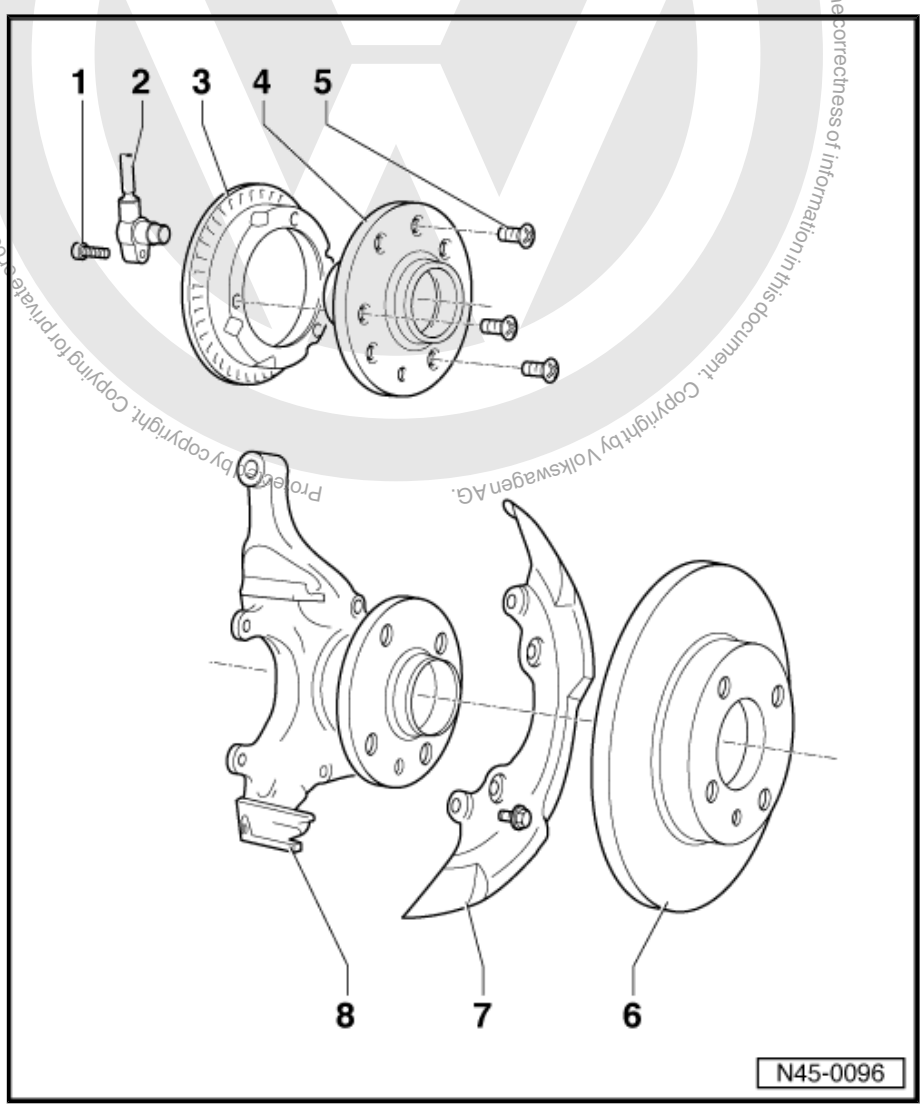

5.1.1 Removing and installing speed sensor on front axle

5.1.2 Removing

– Raise vehicle.

satelettronica

– Disconnect speed sensor wiring connector -1- from speed sensor.
– Remove bolt -2- from wheel bearing housing.
– Pull ABS speed sensor out of wheel bearing housing.

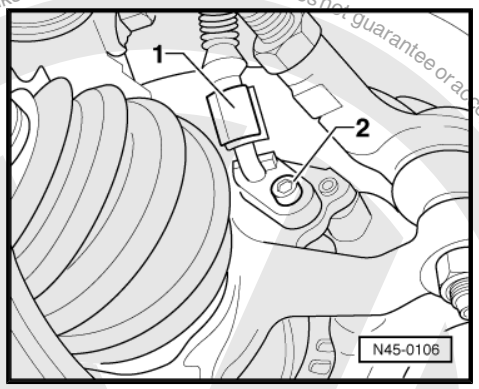

5.1.3 Installing

– Before inserting speed sensor, clean inner surface of hole and coat speed sensor all-round with solid lubricant paste G 000 650.
– Insert speed sensor into hole in wheel bearing housing and tighten bolt to 10 Nm.
– Connect speed sensor to speed sensor wiring.

5.1.4 Checking or removing and installing rotor on front axle

– Raise vehicle.
– Turn wheel to check whether rotor -1- is damaged.
– If rotor is damaged, remove wheel hub with rotor and renew ⇒ Running gear, axles, steering; Rep. Gr. 40 ; Repairing front suspension .

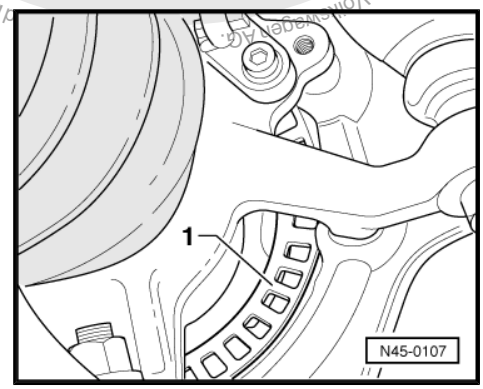

5.1.5 Removing and installing front speed sensor wiring

Special tools and workshop equipment required

♦ Wiring harness repair set -VAS 1978-

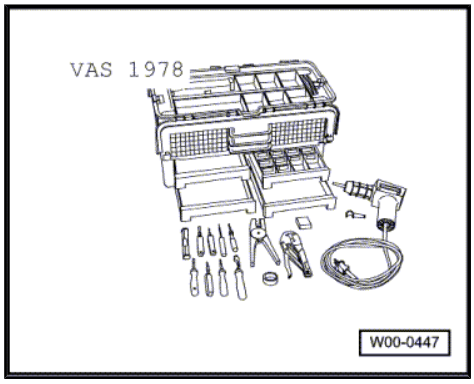

5.1.6 Removing

– Obtain radio code on vehicles with coded radio.

Copyright by Volkswagen AG. Volkswagen AG does not guarantee or accept any liability with respect to the correctness of information in this document. Copyright by Volkswagen AG. Copyright. Copying for private or commercial purposes, in part or in whole, is not permitted unless authorised by Volkswagen AG.
satelettronica

– Disconnect battery

– Release control unit connector -arrow 1- and pull off -arrow 2-.

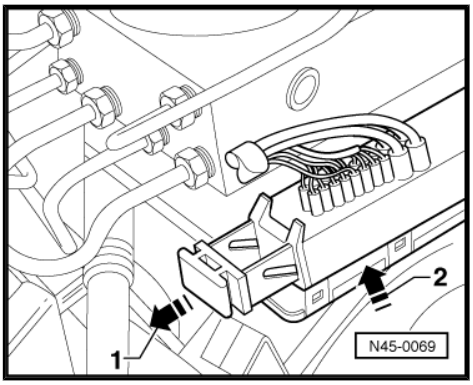

– Release secondary locking device (violet) in direction of arrow with a screwdriver.

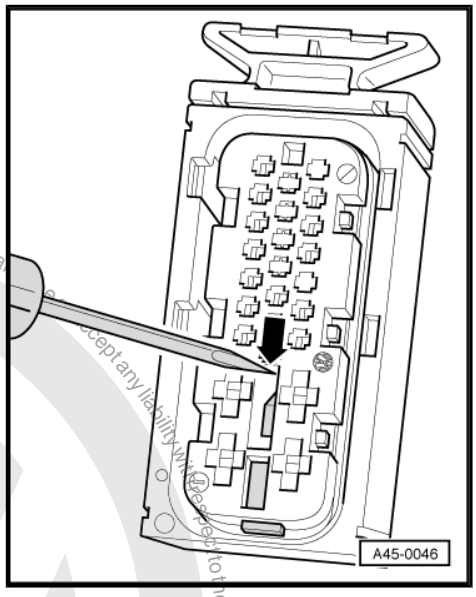

5.1.7 Contact assignment of -T25- connector for wiring harness/control unit -J104-

Contact	Wiring connection to component ...
19 + 20	Front right speed sensor -G45-
1 + 2	Front left speed sensor -G47-

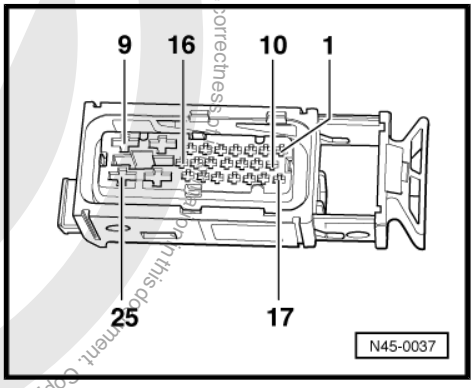

– Push out relevant contacts with an ejector tool from wiring harness repair set -VAS 1978-.

– Unplug connector on speed sensor wire and speed sensor.

– Remove defective speed sensor wiring and guide in new speed sensor wiring.

– Connect speed sensor to speed sensor wiring.

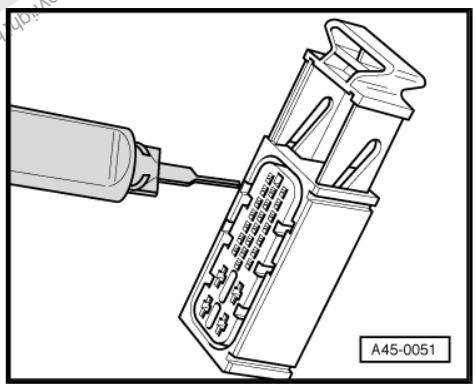

Protected by copyright. Copyright by Volkswagen AG.
Copying for private or commercial purposes, in part or in whole, is not permitted unless authorised by Volkswagen AG. Volkswagen AG does not guarantee or accept any liability with respect to the correctness of information in this document.
satelettronica

– Clip in speed sensor wiring -arrow-.

Ensure the wiring is not twisted when installing the speed sensor wiring in the wheel housing.

– Guide contacts into connector housing.

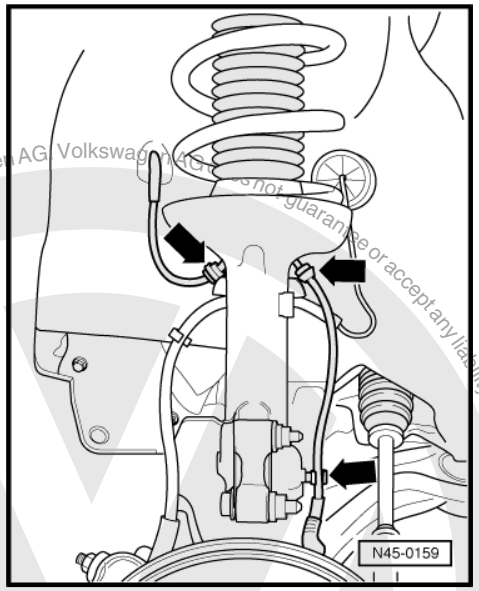

– Push individual wiring seals in onto stop with an insertion tool from -VAS 1978- .

– Secure contacts with secondary locking device and fit cover cap for multi-pin connector.

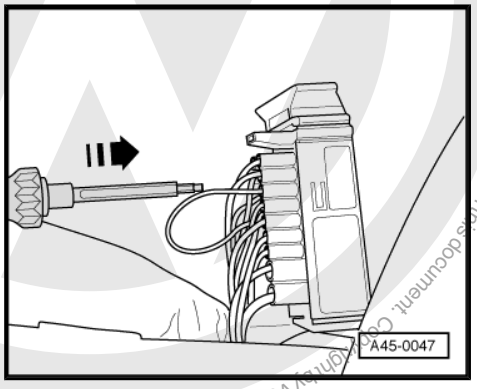

5.2 Removing and installing parts of ABS system on front axle, VW II brake caliper

Copyright by Volkswagen AG, Volkswagen AG does not guarantee or accept any liability with respect to the correctness of information in this document. Copying for private or commercial purposes, in part or in whole, is not permitted unless authorised by Volkswagen AG.
satelettronica

1 - Hexagon socket head bolt, 10 Nm

2 - ABS speed sensor

- ❑ Before inserting sensor, clean inner surface of fitting hole and coat with lubricating paste G 000 650

3 - ABS speed sensor rotor

4 - Wheel hub

- ❑ Pressing out and in ⇒ Running gear, axles, steering; Rep. Gr. 40 ; Repairing front wheel suspension

5 - Cross-head screw

6 - Brake disc, ventilated

- ❑ Never remove brake discs from wheel hub by force. If necessary use penetrating fluid, because otherwise brake discs can be damaged

7 - Cover plate

8 - Wheel bearing housing

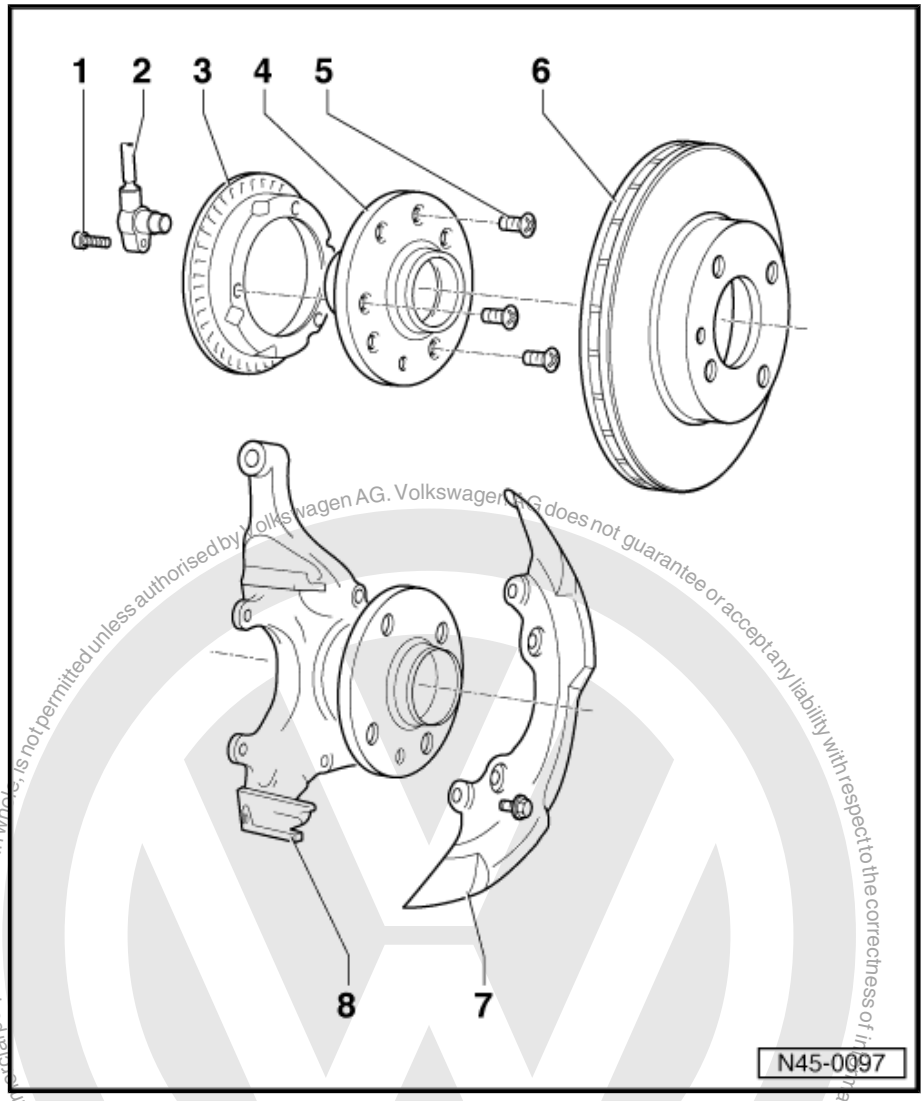

Reproduced by copyright. Copying for private or commercial purposes, in part or in whole, is not permitted unless authorised by Volkswagen AG. Volkswagen AG does not guarantee or accept any liability with respect to the correctness of information in this document. Copyright by Volkswagen AG.

5.2.1 Removing and installing speed sensor on front axle

5.2.2 Removing

– Raise vehicle.

– Disconnect speed sensor wiring connector -1- from speed sensor.

– Remove bolt -2- from wheel bearing housing.

– Pull ABS speed sensor out of wheel bearing housing.

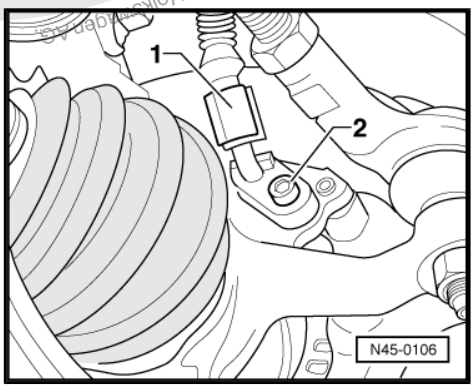

satelettronica

5.2.3 Installing

– Before inserting speed sensor, clean inner surface of hole and coat speed sensor all-round with solid lubricant paste G 000 650.

– Insert speed sensor into hole in wheel bearing housing and tighten bolt to 10 Nm.

– Connect speed sensor to speed sensor wiring.

5.2.4 Checking or removing and installing rotor on front axle

– Raise vehicle.

– Turn wheel to check whether rotor -1- is damaged.

– If rotor is damaged, remove wheel hub with rotor and renew ⇒ Running gear, axles, steering; Rep. Gr. 40 ; Repairing front suspension .

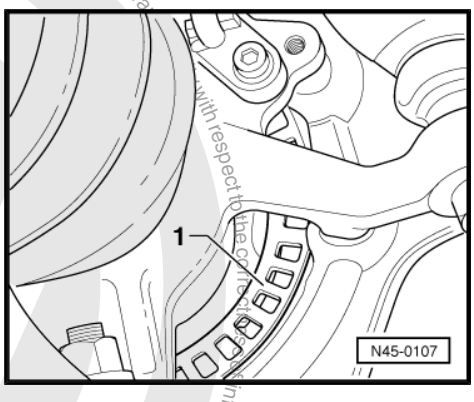

5.2.5 Removing and installing front speed sensor wiring

Special tools and workshop equipment required

♦ Wiring harness repair set -VAS 1978-

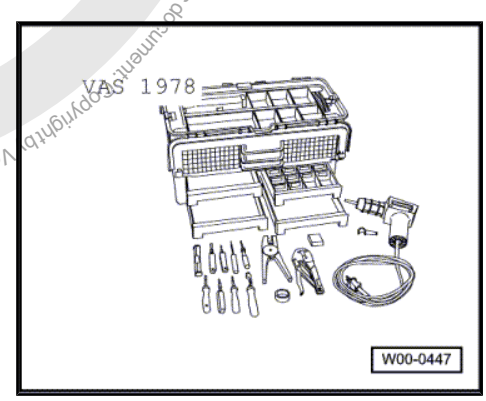

5.2.6 Removing

– Obtain radio code on vehicles with coded radio.

– Disconnect battery

Protected by copyright. Copying for private or commercial purposes, in part or in whole, is not permitted unless authorised by Volkswagen AG. Volkswagen AG does not guarantee or accept any liability with respect to the correctness of information in this document. Copyright by Volkswagen AG.
satelettronica

– Release control unit connector -arrow 1- and pull off -arrow 2-.

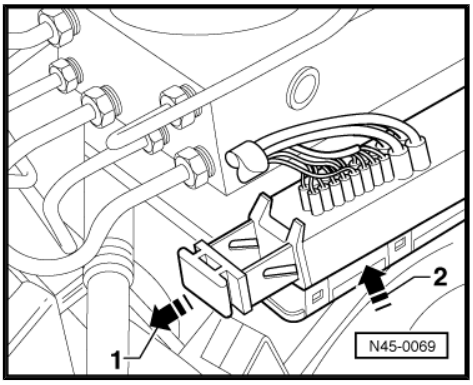

– Release secondary locking device (violet) in direction of arrow with a screwdriver.

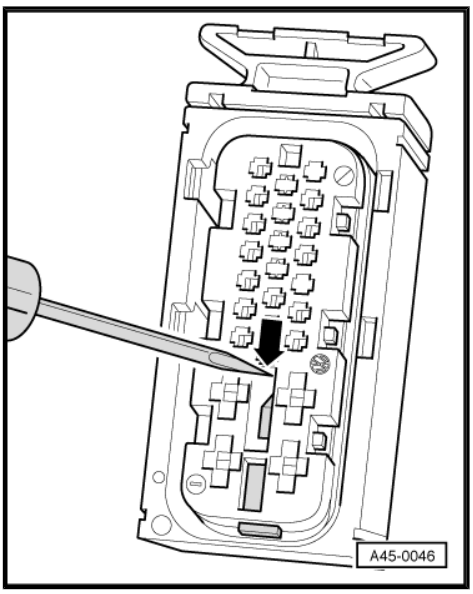

5.2.7 Contact assignment of -T25- connector for wiring harness/control unit -J104-

Contact	Wiring connection to component ...
19 + 20	Front right speed sensor -G45-
1 + 2	Front left speed sensor -G47-

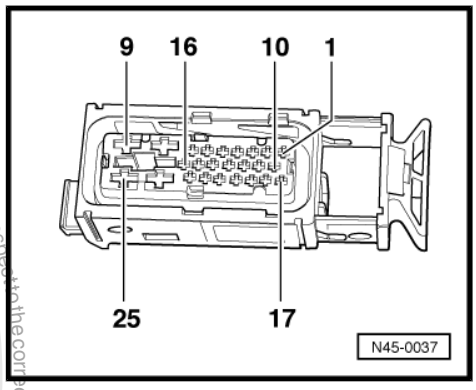

– Push out relevant contacts with an ejector tool from wiring harness repair set -VAS 1978- .

– Unplug connector on speed sensor wire and speed sensor.

– Remove defective speed sensor wiring and guide in new speed sensor wiring.

– Connect speed sensor to speed sensor wiring.

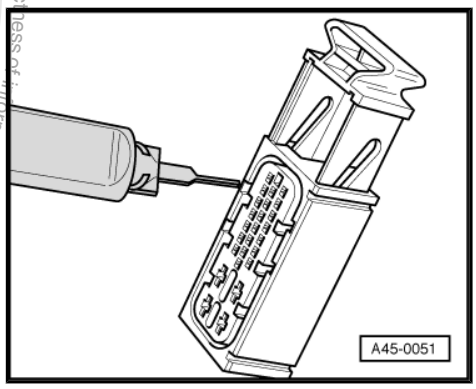

Protected by copyright. Copyright by Volkswagen AG.
Copyright for private or commercial purposes, in part or in whole, is not permitted unless authorised by Volkswagen AG. Volkswagen AG does not guarantee or accept any liability with respect to the correctness of information in this document.
satelettronica

– Clip in speed sensor wiring -arrow-.

Ensure the wiring is not twisted when installing the speed sensor wiring in the wheel housing.

– Guide contacts into connector housing.

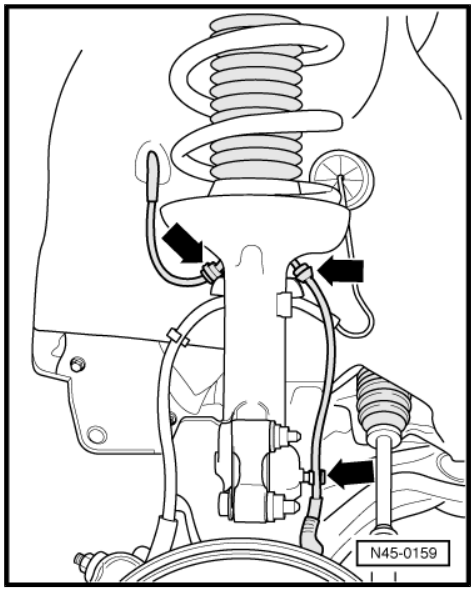

– Push individual wiring seals in onto stop with an insertion tool from -VAS 1978- .

– Secure contacts with secondary locking device and fit cover cap for multi-pin connector.

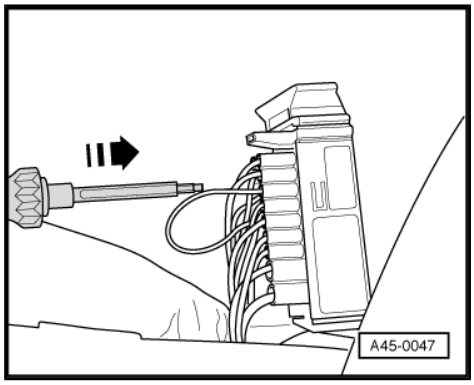

5.3 Removing and installing parts of ABS system on front axle, Girling/Lucas brake caliper

Protected by copyright. Copyright for private or commercial purposes, in part or in whole, is not permitted unless authorised by Volkswagen AG. Volkswagen AG does not guarantee or accept any liability with respect to the correctness of information in this document. Copyright by Volkswagen AG.

satelettronica

1 - Hexagon socket head bolt, 10 Nm

2 - ABS speed sensor

- ❑ Before inserting sensor, clean inner surface of fitting hole and coat with lubricating paste G 000 650

3 - Wheel bearing housing

4 - Cover plate

5 - ABS speed sensor rotor

- ❑ Illustration shows rotor connected to wheel hub
- ❑ Pressing wheel hub out and in ⇒ Running gear, axles, steering; Rep. Gr. 40 ; Repairing front wheel suspension

6 - Brake disc, ventilated

- ❑ Never remove brake discs from wheel hub by force. If necessary use penetrating fluid, because otherwise brake discs can be damaged

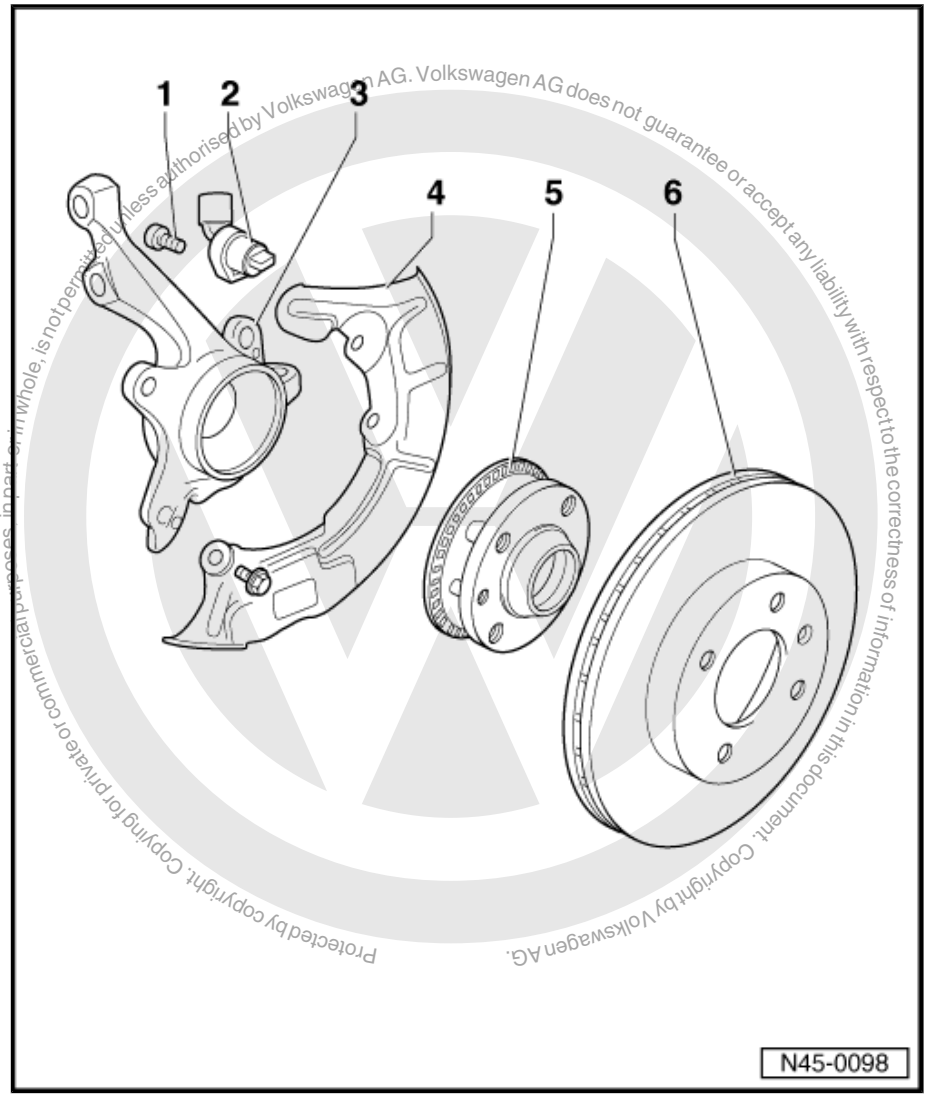

Protected by copyright. Copying for private or commercial purposes, in part or in whole, is not permitted unless authorised by Volkswagen AG. Volkswagen AG does not guarantee or accept any liability with respect to the correctness of information in this document. Copyright by Volkswagen AG.

satelettronica

5.3.1 Removing and installing speed sensor on front axle

5.3.2 Removing

– Raise vehicle.

– Disconnect speed sensor wiring connector -1- from speed sensor.

– Remove bolt -2- from wheel bearing housing.

– Pull ABS speed sensor out of wheel bearing housing.

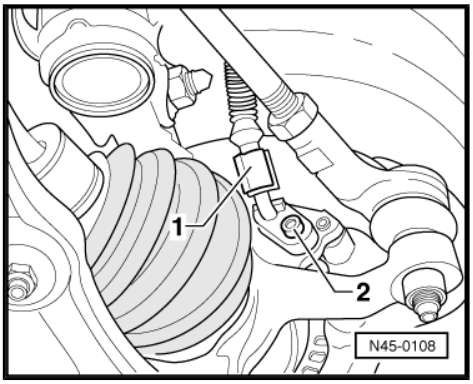

5.3.3 Installing

– Before inserting speed sensor, clean inner surface of hole and coat speed sensor all-round with solid lubricant paste G 000 650.

– Insert speed sensor into hole in wheel bearing housing and tighten bolt to 10 Nm.

– Connect speed sensor to speed sensor wiring.

5.3.4 Checking or removing and installing rotor on front axle

– Raise vehicle.

– Turn wheel to check whether rotor -1- is damaged.

– If rotor is damaged, remove wheel hub with rotor and renew ⇒ Running gear, axles, steering; Rep. Gr. 40 ; Repairing front suspension .

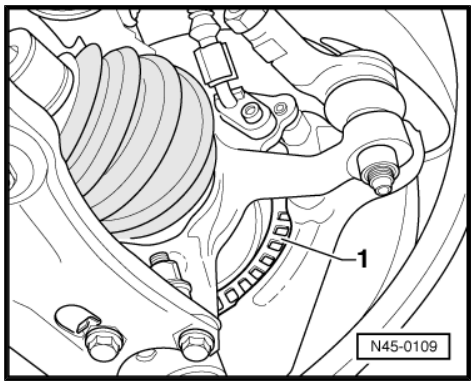

5.3.5 Removing and installing front speed sensor wiring

Special tools and workshop equipment required

♦ Wiring harness repair set -VAS 1978-

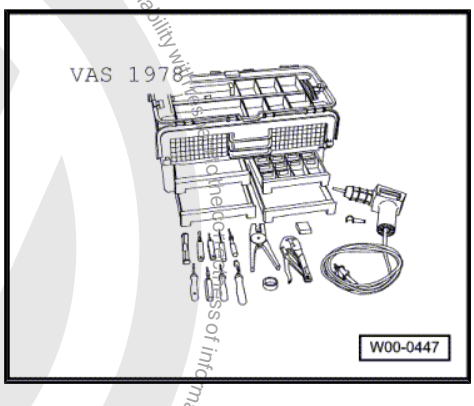

5.3.6 Removing

– Obtain radio code on vehicles with coded radio.

– Disconnect battery.

Protected by copyright. Copying for private or commercial purposes, in part or in whole, is not permitted unless authorised by Volkswagen AG. Volkswagen AG does not guarantee or accept any liability with respect to the correctness of information in this document. Copyright by Volkswagen AG.
satelettronica

– Release control unit connector -arrow 1- and pull off -arrow 2-.

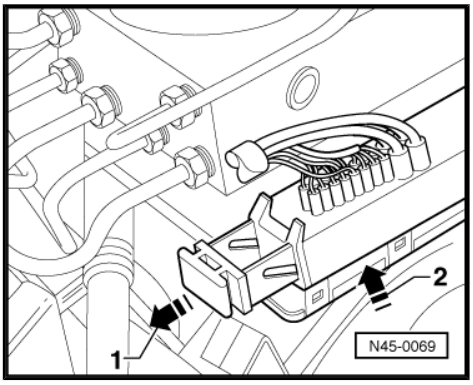

– Release secondary locking device (violet) in direction of arrow with a screwdriver.

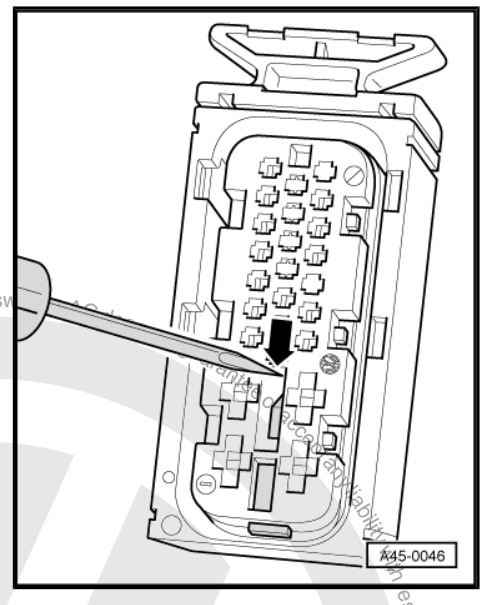

5.3.7 Contact assignment of -T25- connector for wiring harness/control unit -J104-

Contact	Wiring connection to component ...
19 + 20	Front right speed sensor -G45-
1 + 2	Front left speed sensor -G47-

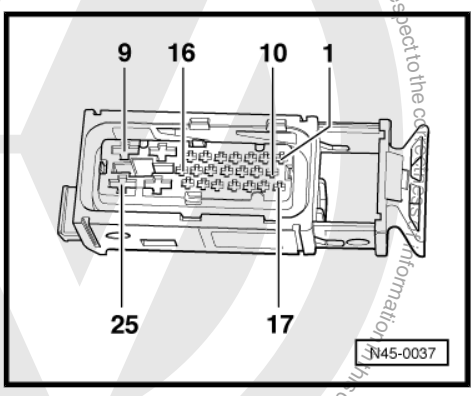

5.3.8 ABS/EDL/TCS/ESP Mark 20 IE -T47- connector assignment

Contact assignment of -T47- connector for wiring harness/control unit -J104-

Contact	Wiring connection to component ...
3 + 4	Front right speed sensor -G45-
33 + 34	Front left speed sensor -G47-

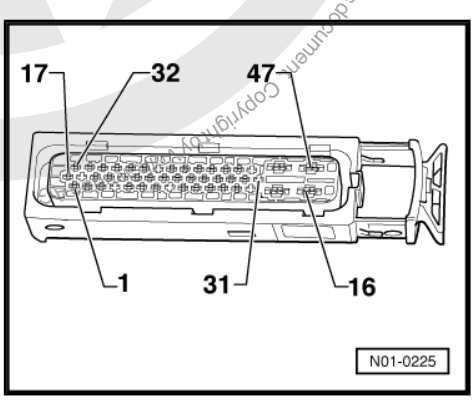

Protected by copyright. Copying for private or commercial purposes, in whole or in part, is not permitted unless authorised by Volkswagen AG. Volkswagen AG does not guarantee or accept any liability with respect to the correctness of information in this document. Copyright by Volkswagen AG.
satelettronica

– Push out relevant contacts with an ejector tool from wiring harness repair set -VAS 1978- .

– Unplug connector on speed sensor wire and speed sensor.

– Remove defective speed sensor wiring and guide in new speed sensor wiring.

– Connect speed sensor to speed sensor wiring.

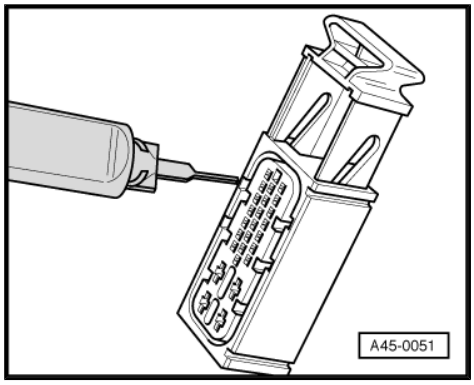

– Clip in speed sensor wiring -arrow-.

Ensure the wiring is not twisted when installing the speed sensor wiring in the wheel housing.

– Guide contacts into connector housing.

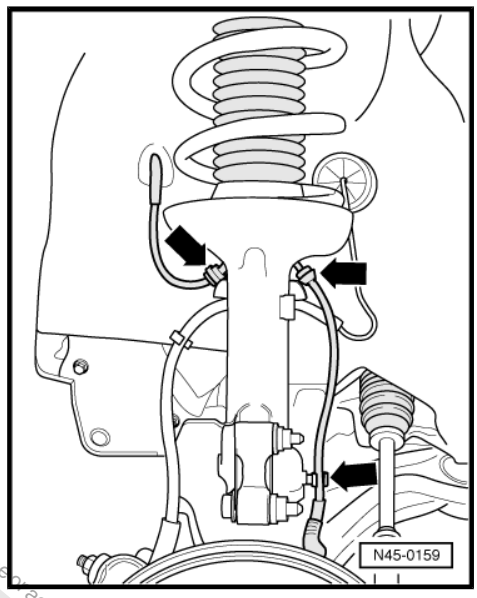

– Push individual wiring seals in onto stop with an insertion tool from -VAS 1978- .

– Secure contacts with secondary locking device and fit cover cap for multi-pin connector.

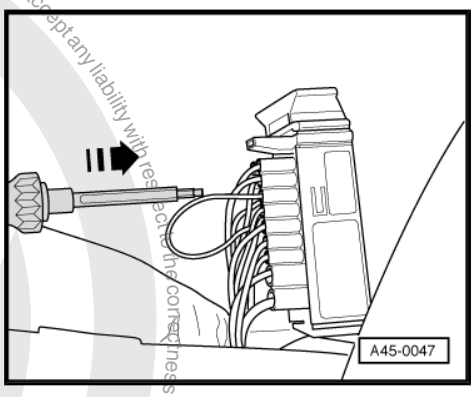

5.4 Removing and installing parts of ABS system on rear axle (vehicles with drum brakes)

Protected by copyright. Copying for private or commercial purposes, in part or in whole, is not permitted unless authorised by Volkswagen AG. Volkswagen AG does not guarantee or accept any liability with respect to the correctness of information in this document. Copyright by Volkswagen AG.

satelettronica

1 - Hexagon socket head bolt, 10 Nm

2 - ABS speed sensor

- ❑ Before inserting sensor, clean inner surface of fitting hole and coat with lubricating paste G 000 650

3 - Stub axle

4 - Brake backplate with brake shoes

- ❑ Release adjustment before removing brake drum, ⇒ page 61

5 - ABS speed sensor rotor

6 - Brake drum

- ❑ Release adjustment before removing brake drum, ⇒ page 61
- ❑ Clean thoroughly, check for wear, damage, tolerances, damaged wheel bolt threads and perfect braking surface
- ❑ Fill hub with multi-purpose grease

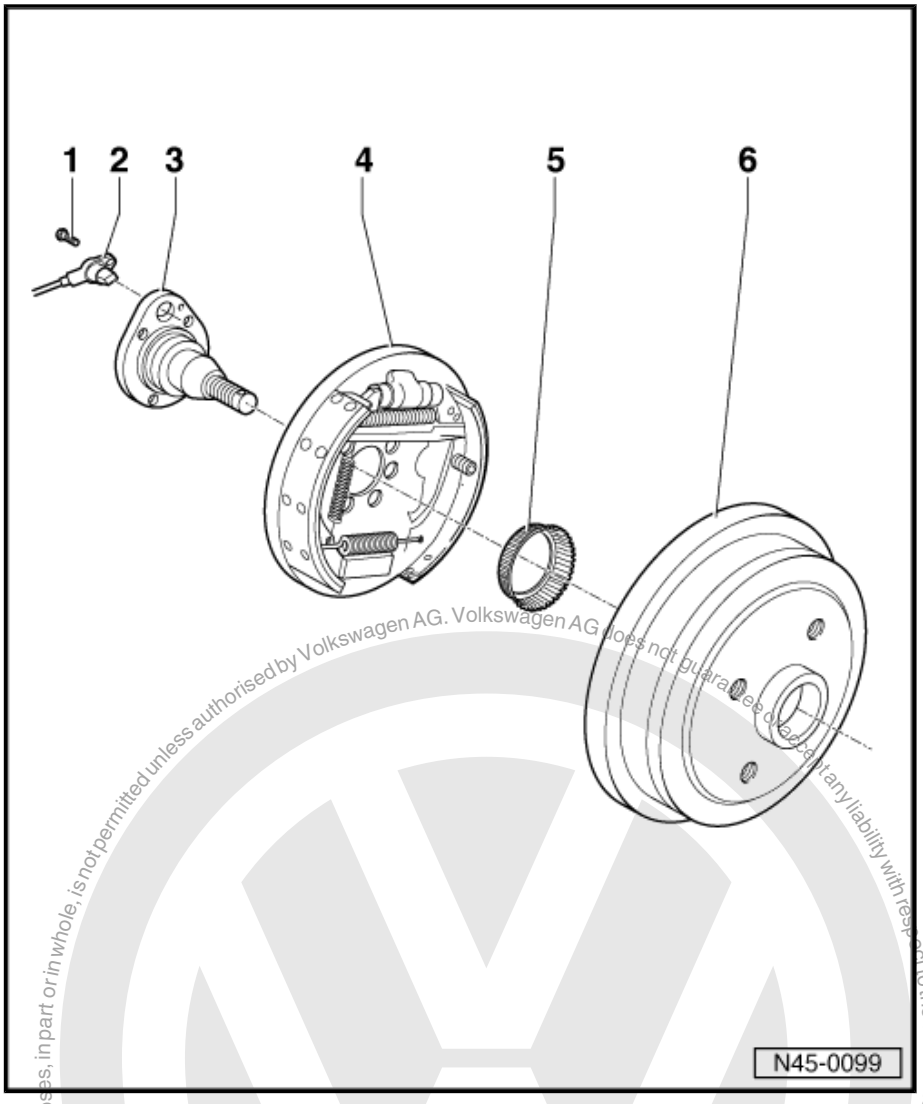

5.4.1 Removing and installing speed sensor on rear axle

5.4.2 Removing

– Fold rear seat bench forwards.

– Disconnect the speed sensor cable connector -arrow-.

– Raise vehicle.

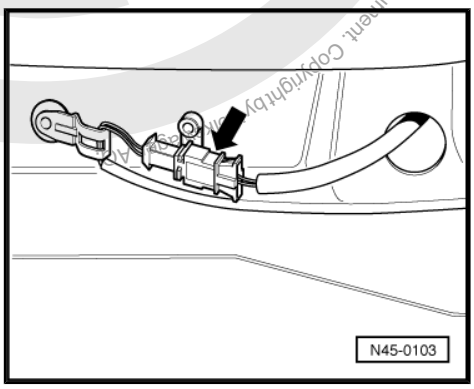

Protected by copyright. Copying for private or commercial purposes, in part or in whole, is not permitted unless authorised by Volkswagen AG. Volkswagen AG does not guarantee or accept any liability with respect to the correctness of information in this document. Copyright by Volkswagen AG.
satelettronica

– Remove bolt -arrow- from speed sensor.
– Pull speed sensor out of stub axle and backplate.

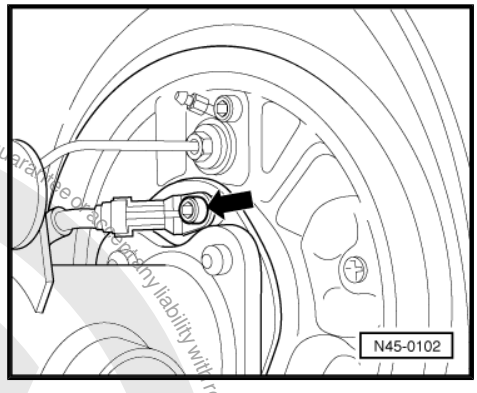

– Unclip speed sensor cable from bracket -1-.
– Unclip grommet -2- and pull speed sensor wiring out of vehicle interior.

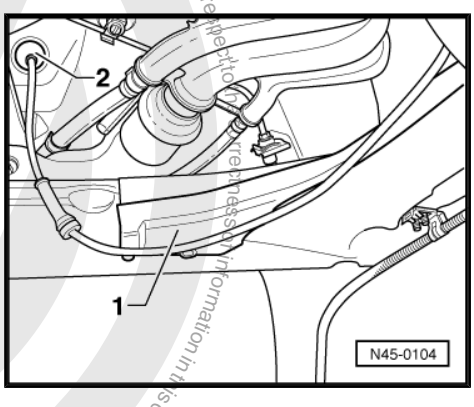

5.4.3 Installing

– Before inserting speed sensor, clean inner surface of hole and coat speed sensor all-round with solid lubricant paste G 000 650.
– Install in reverse order.

5.4.4 Checking or removing and installing rotor on rear axle

Special tools and workshop equipment required

♦ Press tool -VW 407-
♦ Hub grease cap puller -VW 637/2-
♦ Drift sleeve -40 - 20-

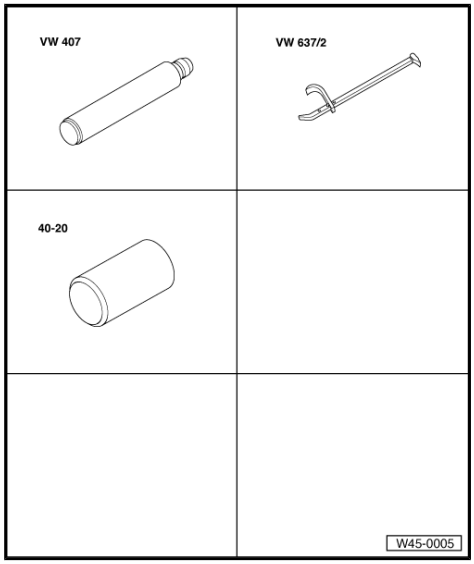

Protected by copyright. Copying for private or commercial purposes, in part or in whole, is not permitted unless authorised by Volkswagen AG. Volkswagen AG does not guarantee or accept any liability with respect to the correctness of information in this document. Copyright by Volkswagen AG.
satelettronica

5.4.5 Removing

– Raise vehicle.

– Remove wheel.

Loosen grease cap from seat by tapping lightly on the claw of the hub grease cap puller -VW 637/2- .

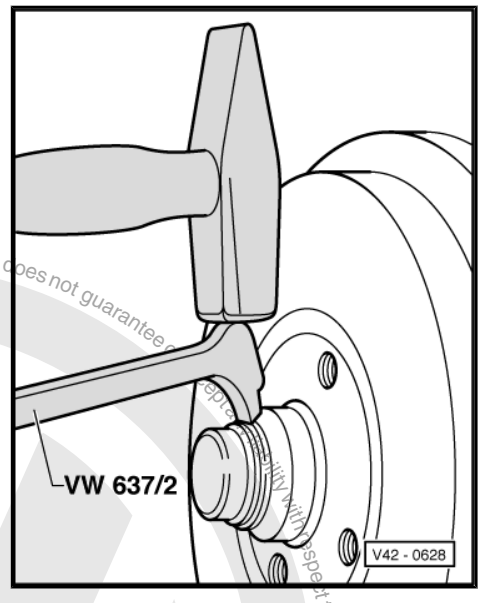

– Lever off grease cap.

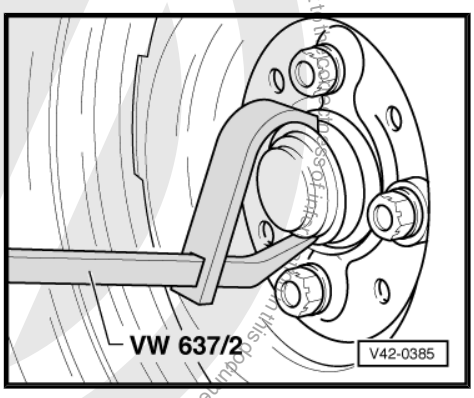

– Back off brake.

– Insert a screwdriver through a hole in the brake drum and push the wedge upwards.

– Remove the split pin from the wheel hub.

– Remove locking ring and unscrew hexagon nut.

– Remove brake drum and ensure that the outer bearing does not fall out.

– Check that the rotor is not damaged. If rotor is damaged proceed according to repair procedures.

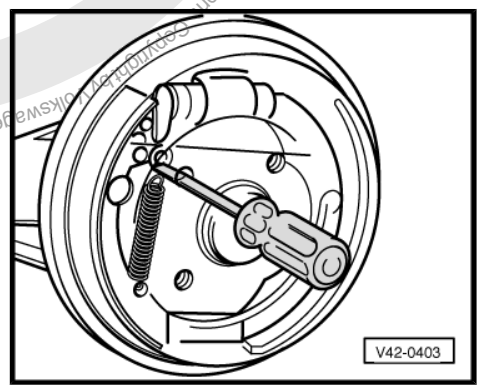

Protected by copyright. Copying for private or commercial purposes, in part or in whole, is not permitted unless authorised by Volkswagen AG. Volkswagen AG does not guarantee or accept any liability with respect to the accuracy, completeness or timeliness of this document. Copyright by Volkswagen AG.
satelettronica

– Lever rotor off brake drum using two screwdrivers.

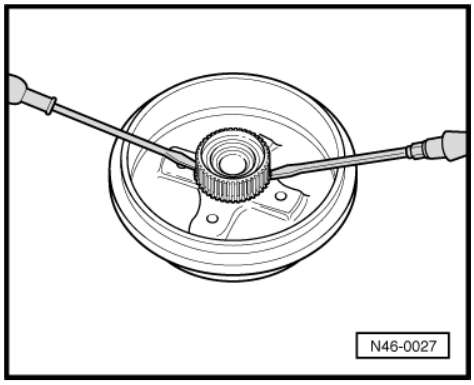

5.4.6 Installing

– Press rotor onto brake drum.

– Install brake drum and adjust wheel bearing play ⇒ Running gear, axles, steering; Rep. Gr. 42 ; Repairing wheel bearing .

– Firmly depress brake pedal once, this adjusts the rear brakes.

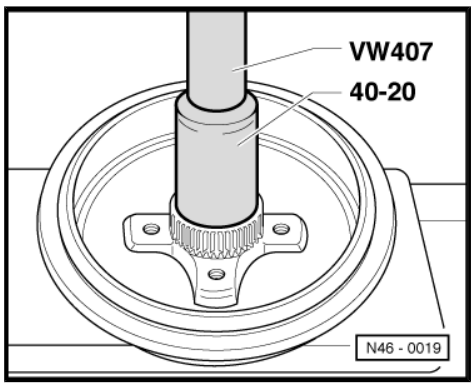

5.5 Removing and installing parts of ABS system on rear axle (vehicles with disc brakes)

Protected by copyright. Copying for private or commercial purposes, in part or in whole, is not permitted unless authorised by Volkswagen AG. Volkswagen AG does not guarantee or accept any liability with respect to the correctness of information in this document. Copyright by Volkswagen AG.
satelettronica

1 - Hexagon socket head bolt, 10 Nm

2 - ABS speed sensor

- ❑ Before inserting sensor, clean inner surface of fitting hole and coat with lubricating paste G 000 650

3 - Stub axle

4 - Cover plate

5 - ABS speed sensor rotor

- ❑ Lever off of brake disc with two screwdrivers
- ❑ Drive on using a suitable sleeve

6 - Brake disc

- ❑ Brake disc assembly sequence (brake disc run-in)
- ❑ Brake caliper
- ❑ Brake pads
- ❑ Brake carrier

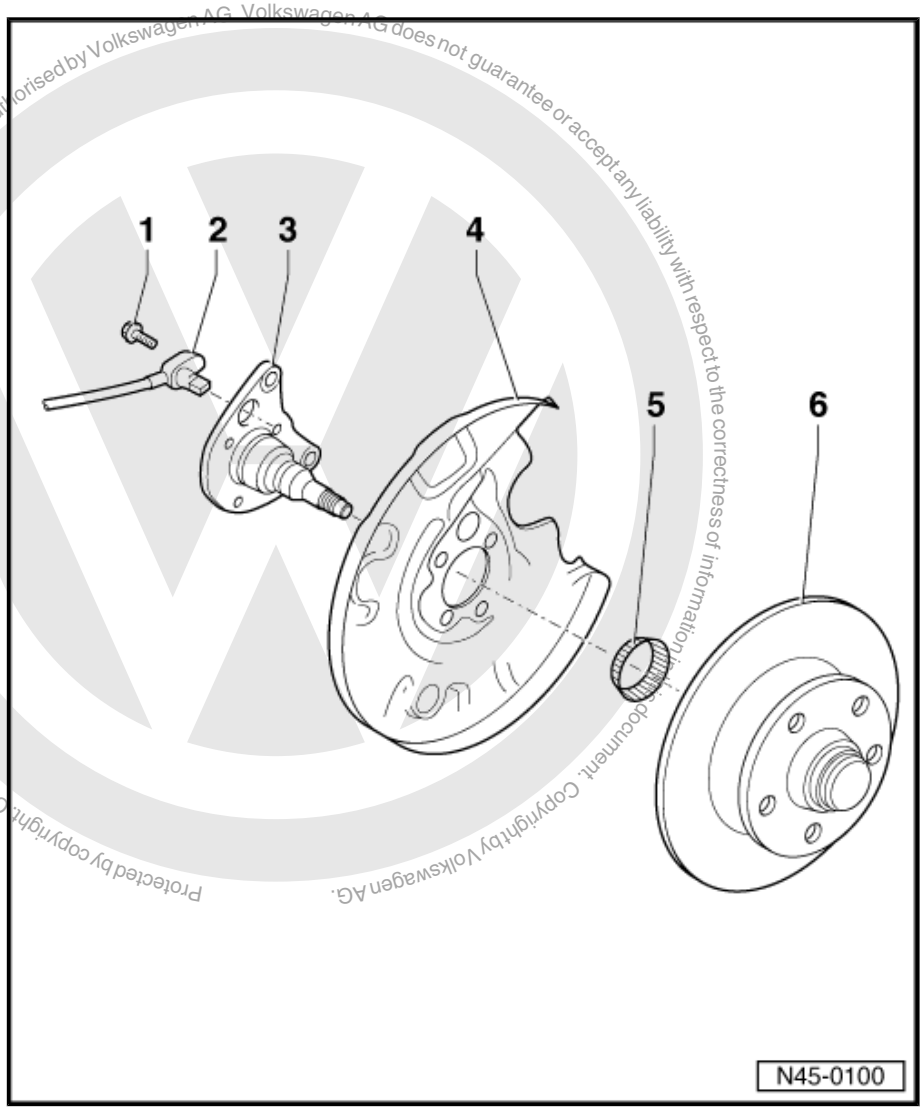

Protected by copyright. Copyright by Volkswagen AG. Volkswagen AG does not guarantee or accept any liability with respect to the correctness of information in this document. Copying for private or commercial purposes, in part or in whole, is not permitted unless authorised by Volkswagen AG.

satelettronica

5.5.1 Removing and installing speed sensor on rear axle

5.5.2 Removing

– Fold rear seat bench forwards.

– Disconnect the speed sensor cable connector -arrow-.

– Raise vehicle.

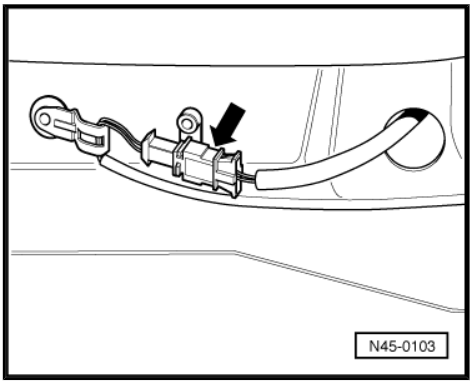

Protected by copyright. Copyright by Volkswagen AG. Volkswagen AG does not guarantee or accept any liability with respect to the correctness of information in this document. Copying for private or commercial purposes, in part or in whole, is not permitted unless authorised by Volkswagen AG.

– Remove bolt -arrow- from speed sensor.
– Pull speed sensor out of stub axle and backplate.

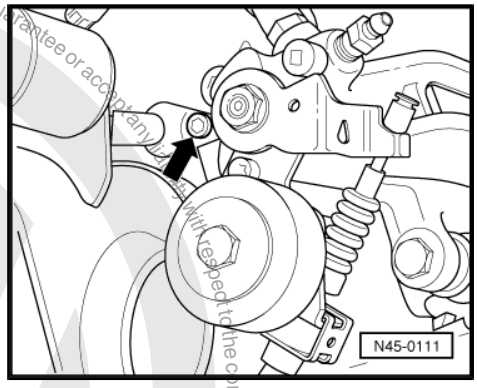

– Unclip speed sensor cable from bracket -1-.
– Unclip grommet -2- and pull speed sensor wiring out of vehicle interior.

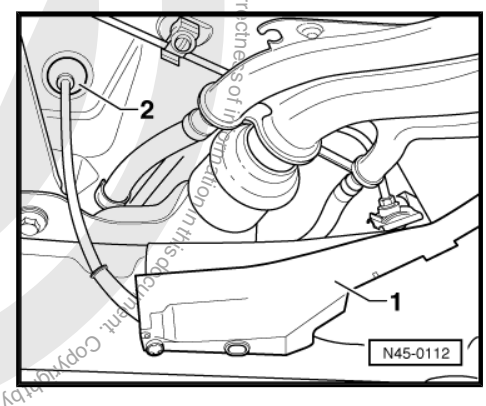

5.5.3 Installing

– Before inserting speed sensor, clean inner surface of hole and coat speed sensor all-round with solid lubricant paste G 000 650.
– Install in reverse order.

5.5.4 Checking or removing and installing rotor on rear axle

Special tools and workshop equipment required

♦ Press tool -VW 407-
♦ Hub grease cap puller -VW 637/2-
♦ Drift sleeve -40 - 20-

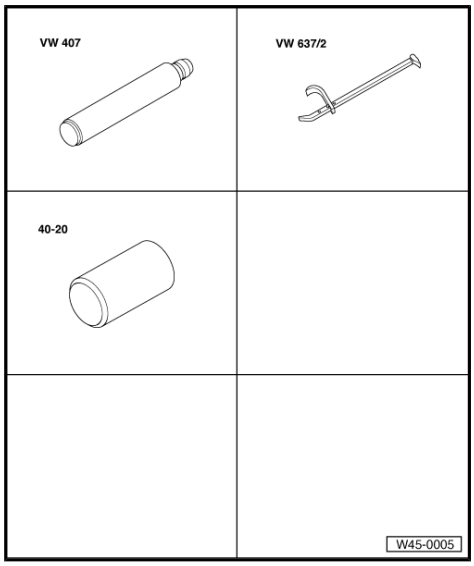

satelettronica

5.5.5 Removing

Mark brake pads when removing if they are to be reused. Reinstall in their original position to prevent uneven braking.

– Raise vehicle.

– Remove wheel.

– Remove clip -1-.

– Press brake lever -2- in direction of arrow and detach hand-brake cable -3-.

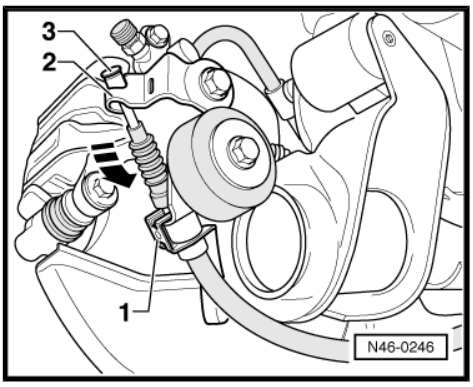

– Unscrew securing bolts for brake caliper.

– Remove brake pads and pad retaining springs.

– Clean brake caliper, in particular the bonding surface for the brake pad. It must be free of adhesive and grease residues.

Use only methylated spirits for cleaning the brake caliper housing.

– Unbolt brake carrier.

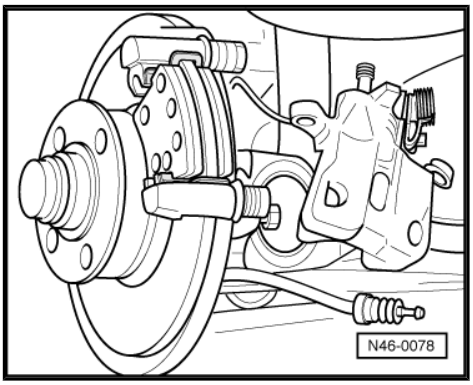

Loosen grease cap from seat by tapping lightly on the claw of the hub grease cap puller -VW 637/2- .

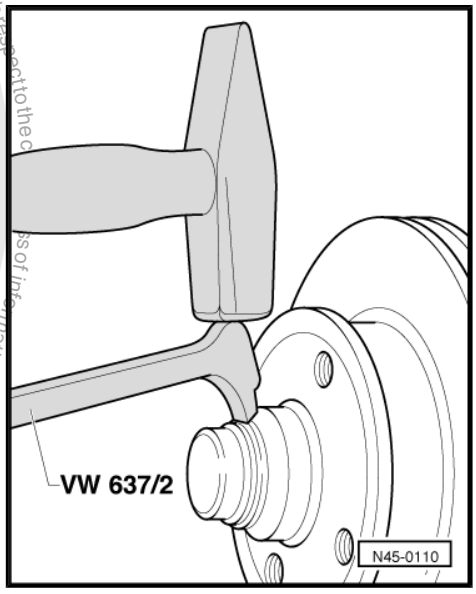

Protected by copyright. Copying for private or commercial purposes, in part or in whole, is not permitted unless authorised by Volkswagen AG. Volkswagen AG does not guarantee or accept any liability with respect to the correctness of information in this document. Copyright by Volkswagen AG.
satelettronica

– Lever off grease cap.
– Remove the split pin from the wheel hub.
– Remove locking ring and unscrew hexagon nut.
– Remove brake disc and ensure that the outer bearing does not fall out.
– Check that the rotor is not damaged. If rotor is damaged proceed according to repair procedures.

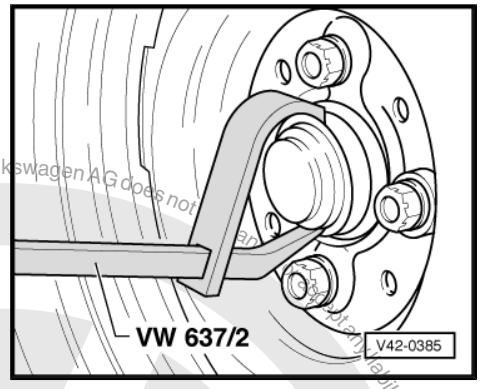

– Lever rotor off brake disc using two screwdrivers.

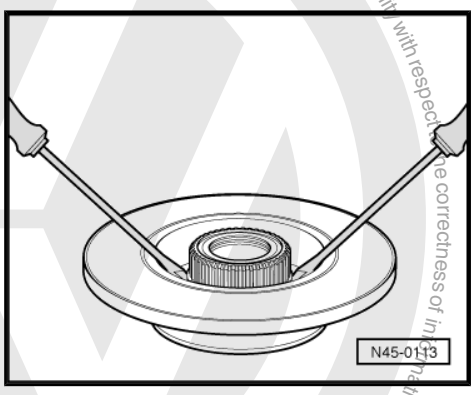

5.5.6 Installing

– Press rotor onto brake disc.
– Install brake disc and adjust wheel bearing play ⇒ Running gear, axles, steering; Rep. Gr. 42 ; Repairing wheel bearing .
– Further installation is performed in reverse sequence.

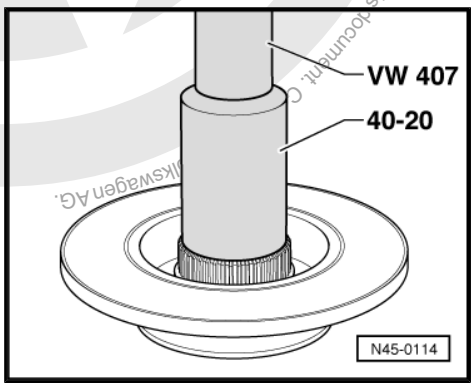

Protected by copyright. Copying for private or commercial purposes, in part or in whole, is not permitted unless authorised by Volkswagen AG. Volkswagen AG does not guarantee or accept any liability with respect to the correctness of information in this document.

satelettronica

6 Removing and installing parts of ESP system

6.1 Removing and installing yaw rate sender -G202-

The jaw rate sender is located under the centre console.

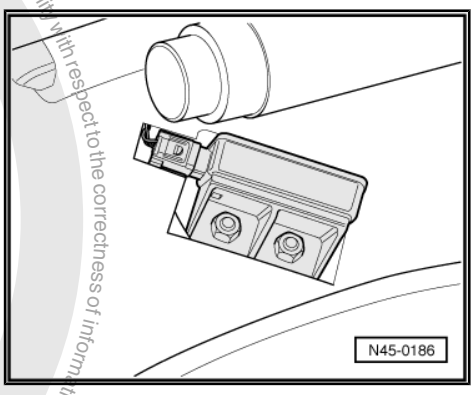

6.1.1 Removing

- Note or request radio code on vehicles with coded radio if necessary.
- Disconnect battery
- Remove centre console ⇒ General body repairs, interior; Rep. Gr. 68 ; Compartments, covers and trims .
- Pull connector off jaw rate sender.
- Remove the two securing nuts.
- Remove yaw rate sender.

6.1.2 Installing

> ⚠ WARNING
>
> *Severe shocks may destroy the yaw rate sender.*

- Install in reverse order.

When installing, ensure that the yaw rate sender is correctly seated in its retainer and is free of stress.

Do not use the securing nuts to forcibly position the yaw rate sender.

- Tighten securing nuts to 6 Nm.

satelettronica

6.2 Removing and installing lateral acceleration sender -G200-

The lateral acceleration sender is located under the centre console.

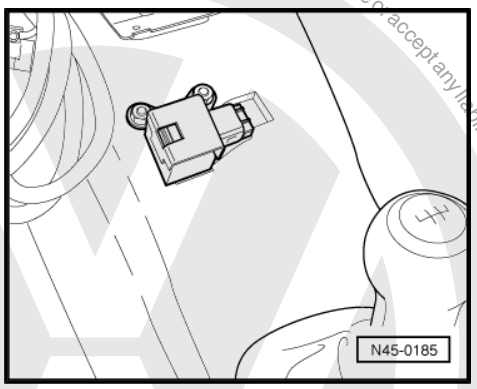

6.2.1 Removing

- Note or request radio code on vehicles with coded radio if necessary.
- Disconnect battery
- Remove centre console ⇒ General body repairs, interior; Rep. Gr. 68 ; Compartments, covers and trims .
- Pull connector off lateral acceleration sender.
- Remove the two securing nuts.
- Remove lateral acceleration sender.
- Lever retainer -1- off lateral acceleration sender -2- with a screwdriver.

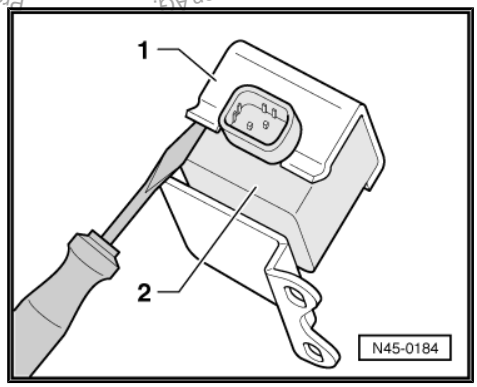

6.2.2 Installing

> ⚠ WARNING
>
> *Severe shocks may destroy the lateral acceleration sender.*

- Place lateral acceleration sender into retainer.

Protected by copyright. Copying for private or commercial purposes, in part or in whole, is not permitted unless authorised by Volkswagen AG. Volkswagen AG does not guarantee or accept any liability with respect to the correctness of information in this document. Copyright by Volkswagen AG.
satelettronica

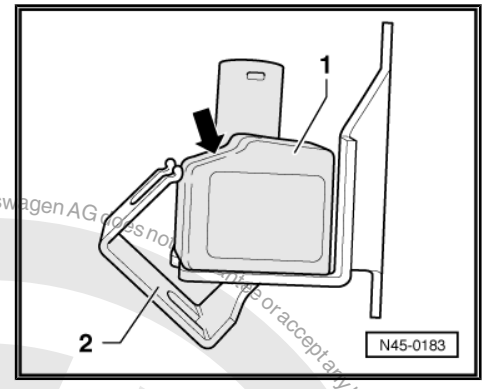

– Installation position: the angled side -arrow- of the lateral acceleration sender -1- must face retainer -2-.
– Slide retainer -2- over lateral acceleration sender -1- until it engages.

Further installation in reverse order.

When installing, ensure that the lateral acceleration sender is correctly seated in its retainer and is free of stress.

Under no circumstances should the securing nuts be used to forcibly position the lateral acceleration sender.

– Tighten securing nuts to 6 Nm.
– Perform basic settings for lateral acceleration sender -G200-
  ⇒ Running gear; Self-diagnosis for ABS; Rep. Gr. 01 ; Performing self-diagnosis; Initiating basic settings .

6.3 Removing and installing steering angle sender -G85-

The steering angle sender is located between the steering wheel and steering column switch.

Removing and installing

⇒ Running gear, axles, steering; Rep. Gr. 48 ; Airbag, steering wheel, steering column .

– Finally, perform basic settings for steering angle sender -G85-
  ⇒ Running gear; Self-diagnosis for ABS; Rep. Gr. 01 ; Performing self-diagnosis; Initiating basic settings .

Protected by copyright. Copying for private or commercial purposes, in part or in whole, is not permitted unless authorised by Volkswagen AG. Volkswagen AG does not guarantee or accept any liability with respect to the correctness of information in this document. Copyright by Volkswagen AG.
satelettronica

46 – Brakes - mechanism

1 Repairing front brakes

Special tools and workshop equipment required

- Torque wrench -V.A.G 1331-
- Torque wrench -V.A.G 1410-
- Brake pedal depressor -V.A.G 1869/2-

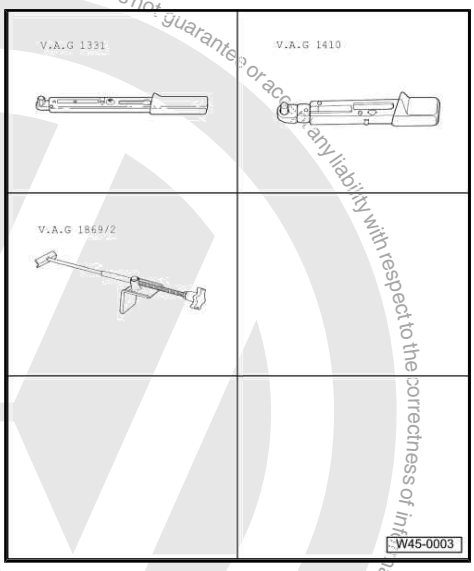

1.1 Repairing front brakes, VW I and VW II brake caliper

Note

- *After changing brake pads, firmly depress brake pedal several times with vehicle stationary, so that the brake pads are properly seated in their normal operating position.*
- *After work for which the brake system had to be opened, bleed the brake system with brake filling and bleeding unit - VAS 5234- or extraction unit -V.A.G 1869/4- .*
- *Fit brake pedal depressor -V.A.G 1869/2- before removing a brake caliper or disconnecting a brake hose (release pressure in system for this).*

satelettronica

1 - Hexagon socket head bolt, 10 Nm

2 - ABS speed sensor

- ❑ Before inserting sensor, clean inner surface of fitting hole and coat with lubricating paste G 000 650

3 - ABS speed sensor rotor

4 - Wheel hub

- ❑ Pressing out and in ⇒ Running gear, axles, steering; Rep. Gr. 40 ; Repairing front wheel suspension

5 - Cross-head screw

6 - Brake disc, ventilated

- ❑ For VW II brake caliper
- ❑ Internally ventilated brake disc: ∅ 239.00 mm
- ❑ Brake disc thickness: 18 mm
- ❑ Wear limit: 16 mm
- ❑ When worn, always renew on both sides of axle

7 - Brake disc

- ❑ For VW I brake caliper
- ❑ Non-ventilated brake disc: ∅ 239.00 mm
- ❑ Brake disc thickness: 10

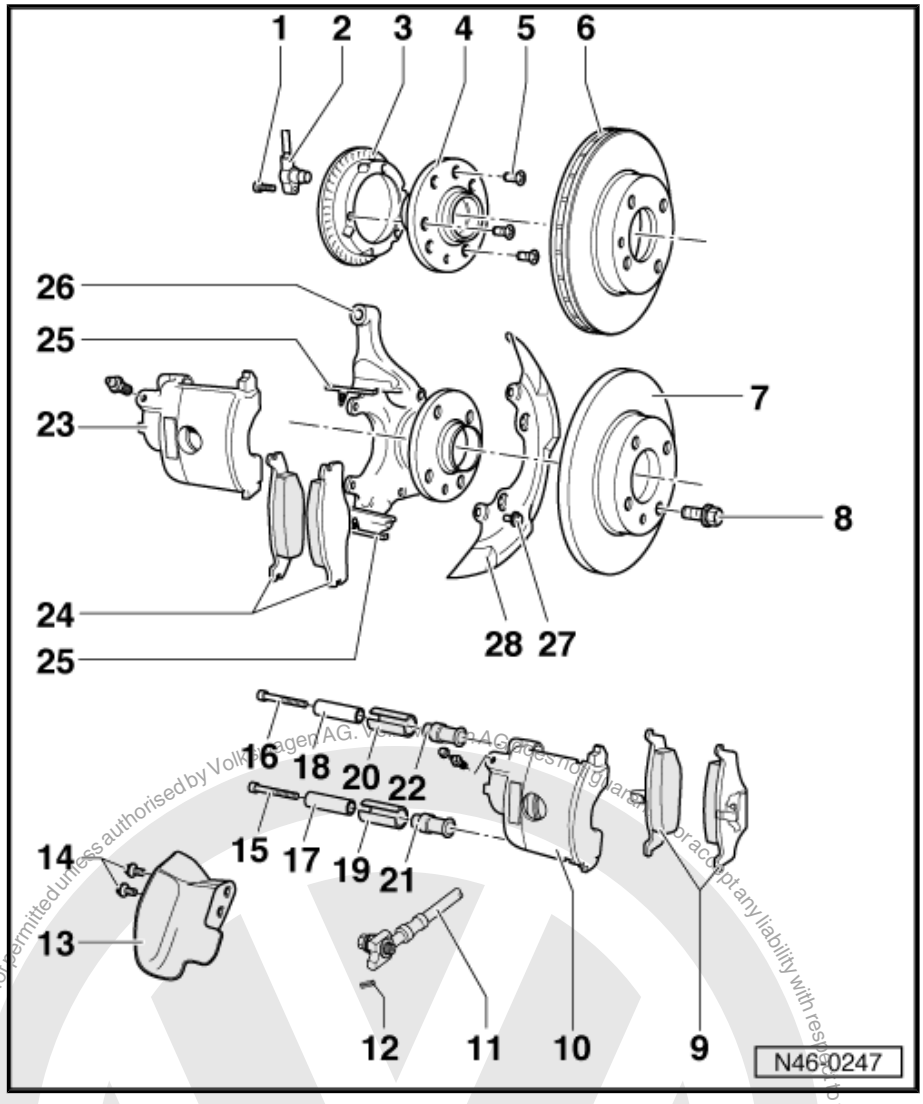

Protected by copyright. Copying for private or commercial purposes, in part or in whole, is not permitted unless authorised by Volkswagen AG. Volkswagen AG does not guarantee or accept any liability with respect to the correctness of information in this document. Copyright by Volkswagen AG.

satelettronica

mm
- ❑ Wear limit: 8 mm
- ❑ When worn, always renew on both sides of axle

8 - Wheel bolt, 110 Nm

9 - Brake pads
- ❑ Allocation ⇒ Electronic Parts Catalogue (ETKA)
- ❑ With retaining springs fastened with rivets
- ❑ Thickness 12 mm not including backplate
- ❑ Wear limit: 2 mm excluding backing plate
- ❑ Checking thickness ⇒ Maintenance ; Booklet 28
- ❑ Always renew both sides
- ❑ Brake pad with larger pad surface is located on outside
- ❑ Removing and installing ⇒ page 51

10 - VW II brake caliper
- ❑ Allocation ⇒ Electronic Parts Catalogue (ETKA)
- ❑ Repairing ⇒ page 82
- ❑ Removing and installing ⇒ page 51

11 - Pressure hose with ring support
- ❑ With banjo bolt and seals
- ❑ Specified torque for banjo bolt 35 Nm

12 - Spring pin

13 - Air deflector plate

14 - Hexagon bolt, 15 Nm

15 - Lower Allen head bolt, 25 Nm

16 - Upper Allen head bolt, 25 Nm

17 - Lower spacer sleeve

18 - Upper spacer sleeve

19 - Lower sleeve

20 - Upper sleeve

21 - Lower bush

22 - Upper bush

23 - VW I brake caliper
- ❑ Allocation ⇒ Electronic Parts Catalogue (ETKA)
- ❑ Repairing ⇒ page 82
- ❑ Removing and installing ⇒ page 49

24 - Brake pads
- ❑ Allocation ⇒ Electronic Parts Catalogue (ETKA)
- ❑ Thickness 12 mm not including backplate
- ❑ Wear limit: 2 mm excluding backing plate
- ❑ Checking thickness ⇒ Maintenance ; Booklet 28
- ❑ Always renew both sides
- ❑ Brake pad with larger pad surface is located on outside
- ❑ Removing and installing ⇒ page 49

Protected by copyright. Copyright by Volkswagen AG.
Copyright by Volkswagen AG. Volkswagen AG does not guarantee or accept any liability with respect to the correctness of information in this document.
Copying for private or commercial purposes, in part or in whole, is not permitted unless authorised by Volkswagen AG.
satelettronica

25 - Brake pad retaining spring

- ❑ Vehicles to identity No. 6N TW 070 000 or 6N TY 140 000
- ❑ Assemble before installing brake pads on brake carrier
- ❑ Always renew when changing brake pads

26 - Wheel bearing housing

27 - Hexagon bolt, 10 Nm

28 - Cover plate

1.2 Removing and installing brake pads, up to 01.96

Special tools and workshop equipment required

- ♦ Torque wrench -V.A.G 1331-

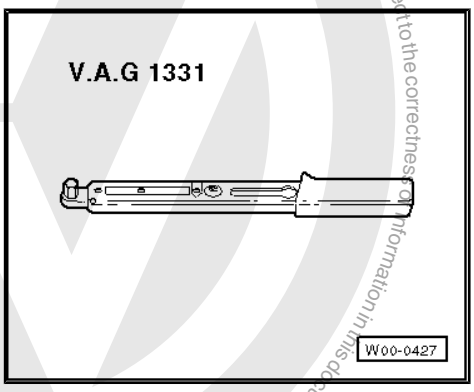

- ♦ Piston resetting tool -T10145-

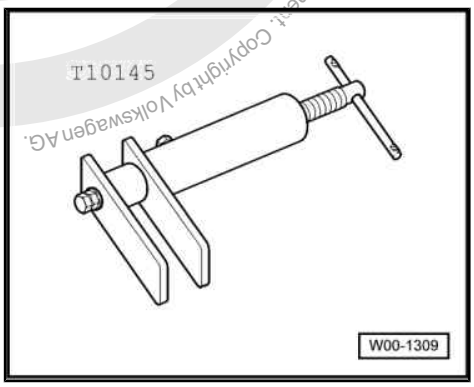

1.2.1 Removing

– Remove wheels.

Protected by copyright. Copying for private or commercial purposes, in part or whole, is not permitted unless authorised by Volkswagen AG. Volkswagen AG does not guarantee or accept any liability with respect to the correctness of information in this document. Copyright by Volkswagen AG.
satelettronica

– Swivel brake caliper out from bottom to top after loosening Allen head bolts.

– Remove brake pads and pad retaining springs.

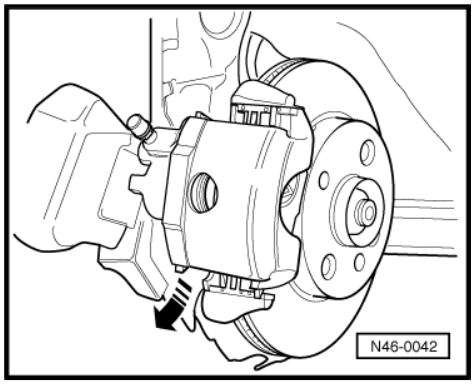

Cleaning

> ⚠ **WARNING**
>
> ***Do not use compressed air on brake system, the dust thereby produced is hazardous to health!***

– Throughly clean brake carrier and contact surfaces for brake pads and remove corrosion.

– Clean brake caliper.

Use only methylated spirits for cleaning the brake caliper housing.

1.2.2 Installing

Before pressing piston back into cylinder with piston resetting tool, draw off brake fluid from brake fluid reservoir. Otherwise, particularly if reservoir has been topped up, fluid will overflow and cause damage.

– Press pistons back with piston resetting appliance -T10145- .

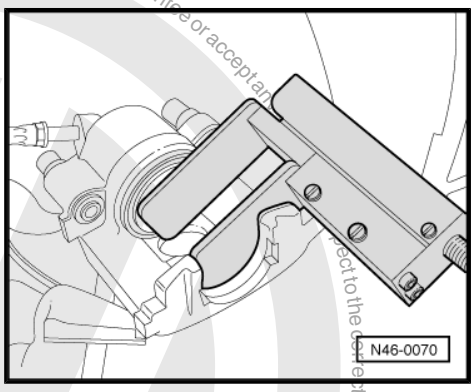

– Fit pad retaining springs and inner brake pad on brake carrier.

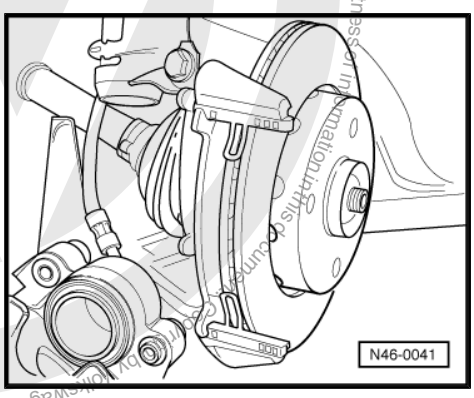

Protected by copyright. Copying for private or commercial purposes, in part or in whole, is not permitted unless authorised by Volkswagen AG. Volkswagen AG does not guarantee or accept any liability with respect to the correctness of information in this document.
Copyright by Volkswagen AG.
satelettronica

– Install outer brake pad.

– Only insert brake caliper until securing bolts can be positioned.

If brake caliper is pressed past this point, brake pad retaining springs may be deformed. This may cause noise on braking.

– Install wheels.

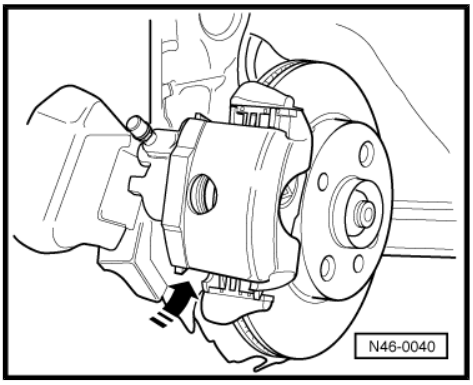

Note

- *After changing brake pads, firmly depress brake pedal several times with vehicle stationary, so that the brake pads are properly seated in their normal operating position.*
- *After changing brake pads check brake fluid level.*

Specified torques	
Allen head bolt on brake carrier	25 Nm

1.3 Removing and installing brake pads, from 01.96

Introduced on vehicles as of identity No. 6N TW 070001 or 6N TY 140001

Special tools and workshop equipment required

- Torque wrench -V.A.G 1331-

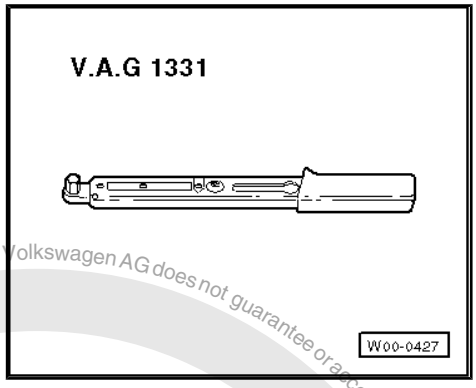

- Piston resetting tool -T10145-

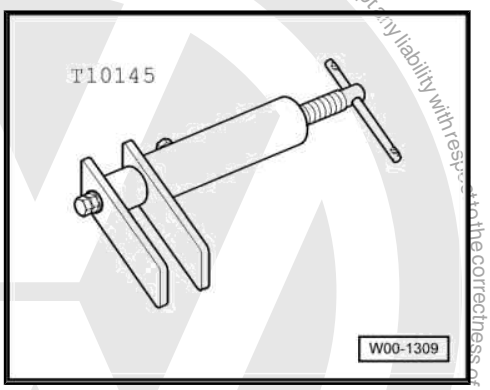

1.3.1 Removing

– Remove wheels.

satelettronica
Protected by copyright. Copying for private or commercial purposes, in part or in whole, is not permitted unless authorised by Volkswagen AG. Volkswagen AG does not guarantee or accept any liability with respect to the correctness of information in this document. Copyright by Volkswagen AG.

– Unscrew both guide pins from brake caliper and remove.

– Remove brake caliper housing and secure with wire so that the weight of the brake caliper does not stress or damage the brake hose.

– Take brake pads out of brake caliper.

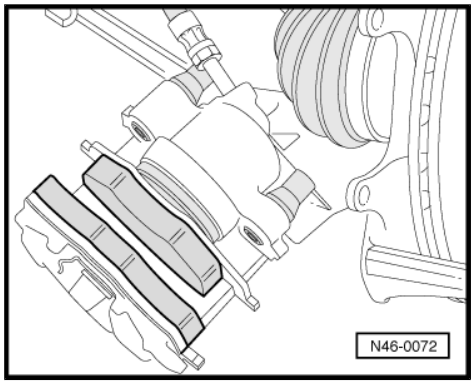

Cleaning

> ⚠ **WARNING**
>
> ***Do not use compressed air on brake system, the dust thereby produced is hazardous to health!***

– Throughly clean brake carrier and contact surfaces for brake pads and remove corrosion.

– Clean brake caliper.

Use only methylated spirits for cleaning the brake caliper housing.

1.3.2 Installing

Before pressing piston back into cylinder with piston resetting tool, draw off brake fluid from brake fluid reservoir. Otherwise, particularly if reservoir has been topped up, fluid will overflow and cause damage.

– Press pistons back with piston resetting appliance -T10145- .

– Insert brake pads.

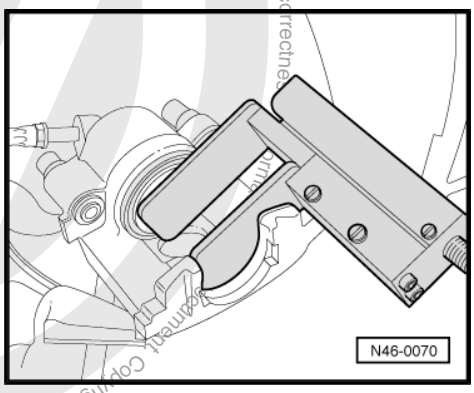

Brake pad with larger pad surface must be located on outside.

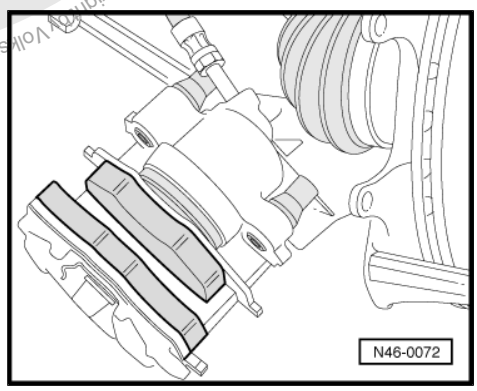

Protected by copyright. Copying for private or commercial purposes, in part or whole, is not permitted unless authorised by Volkswagen AG. Volkswagen AG does not guarantee or accept any liability with respect to the correctness of information. Copyright by Volkswagen AG.

satelettronica

– Install brake caliper with brake pads on wheel bearing housing.
– Locate lower part of brake caliper housing -arrow- first.
• Brake caliper pin must be positioned behind brake carrier guide!
– Bolt brake caliper to brake carrier with both Allen head bolts.
– Install wheels.

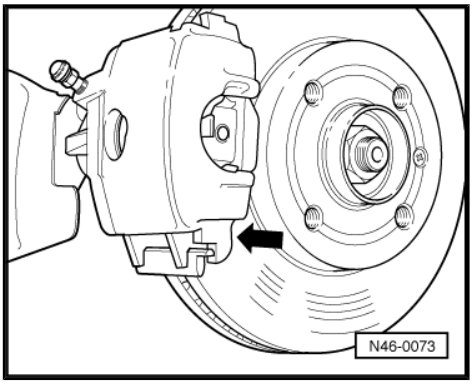

Note

♦ *After changing brake pads, firmly depress brake pedal several times with vehicle stationary, so that the brake pads are properly seated in their normal operating position.*

♦ *After changing brake pads check brake fluid level.*

Specified torques	
Allen head bolt on brake carrier	25 Nm

1.4 Repairing Girling/Lucas front brakes

Special tools and workshop equipment required

♦ Torque wrench -V.A.G 1331-
♦ Torque wrench -V.A.G 1410-
♦ Brake pedal depressor -V.A.G 1869/2-

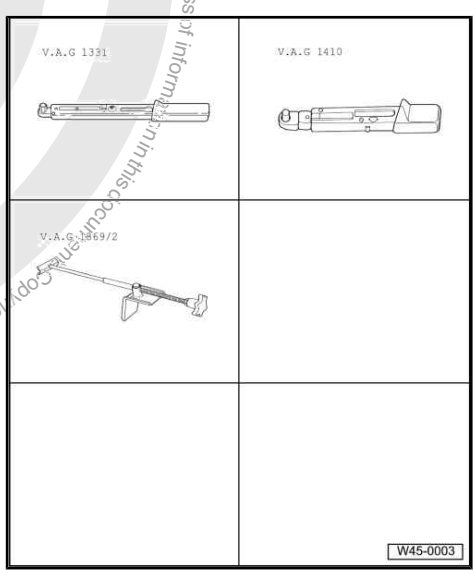

Note

♦ *After changing brake pads, firmly depress brake pedal several times with vehicle stationary, so that the brake pads are properly seated in their normal operating position.*

♦ *After work for which the brake system had to be opened, bleed the brake system with brake filling and bleeding unit - VAS 5234- or extraction unit -V.A.G 1869/4- .*

♦ *Fit brake pedal depressor -V.A.G 1869/2- before removing a brake caliper or disconnecting a brake hose (release pressure in system for this).*

Protected by copyright. Copying for private or commercial purposes, in part or in whole, is not permitted unless authorised by Volkswagen AG. Volkswagen AG does not guarantee or accept any liability with respect to the correctness of information in this document. Copyright by Volkswagen AG.
satelettronica

1 - Brake disc, ventilated

- ❑ Internally ventilated brake disc: ∅ 256.00 mm
- ❑ Thickness of brake disc for 1.4l 16V: 20 mm
- ❑ Wear limit: 18 mm
- ❑ Thickness of brake disc for 1.6l 16V: 25 mm
- ❑ Wear limit: 23 mm
- ❑ When worn, always renew on both sides of axle
- ❑ Never remove brake discs from wheel hub by force. If necessary use penetrating fluid, because otherwise brake discs can be damaged

2 - Cross-head screw

3 - Brake pads

- ❑ With noise reduction plate on rear side of backplate
- ❑ Always renew both sides
- ❑ Removing and installing ⇒ page 55
- ❑ Thickness 11 mm not including backplate
- ❑ Checking thickness ⇒ Maintenance ; Booklet 28
- ❑ Wear limit: 2 mm ex-

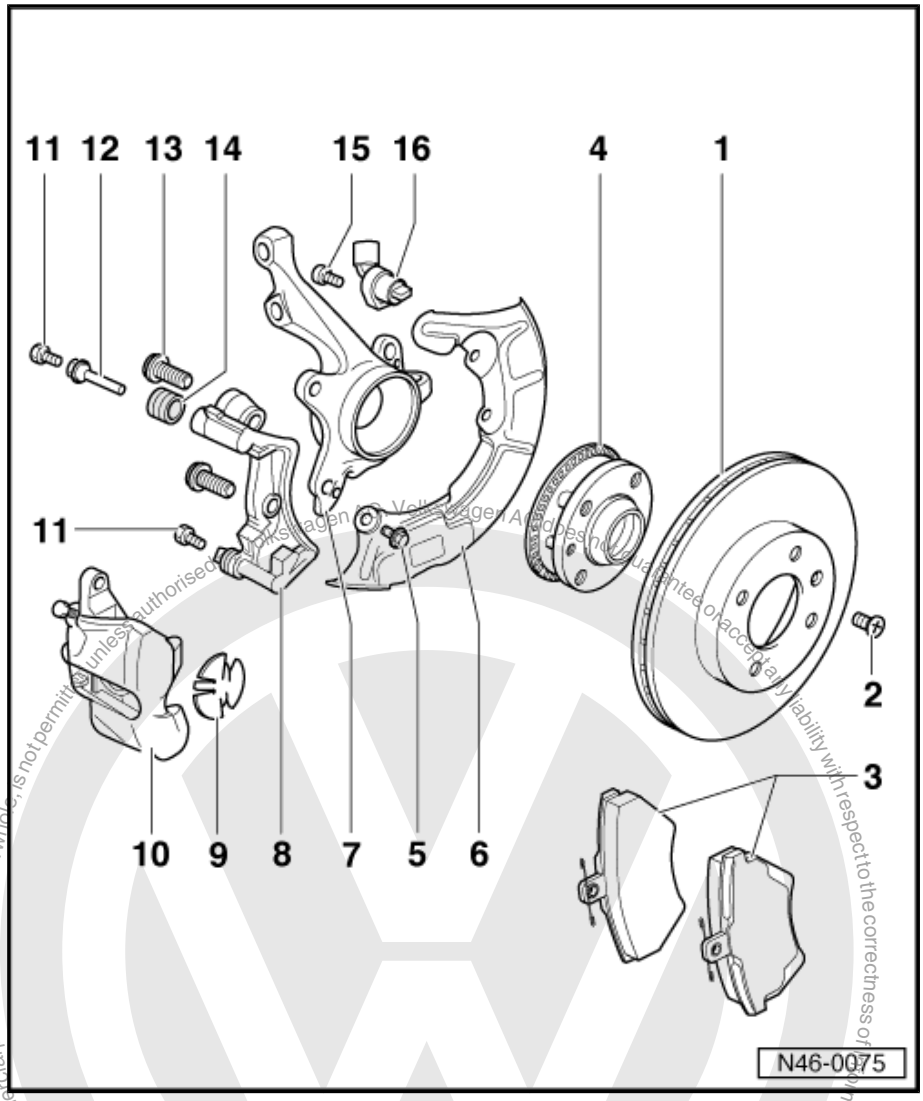

Protected by copyright. Copying for private or commercial purposes, in part or in whole, is not permitted unless authorised by Volkswagen AG. Volkswagen AG does not guarantee or accept any liability with respect to the correctness of information in this document. Copyright by Volkswagen AG.
satelettronica

cluding backing plate

4 - Wheel hub

- ❑ Pressing out and in ⇒ Running gear, axles, steering; Rep. Gr. 40 ; Repairing front wheel suspension

5 - Hexagon bolt, 10 Nm

6 - Cover plate

7 - Wheel bearing housing

8 - Brake carrier with guide pins and protective caps

- ❑ Supplied as replacement part, assembled with sufficient grease on guide pins
- ❑ Use repair set if protective caps are damaged
- ❑ Use supplied grease sachet to lubricate guide pins

9 - Heat shield

- ❑ Insert into piston

10 - Brake caliper

- ❑ Repairing ⇒ page 85
- ❑ Removing and installing ⇒ page 55

11 - Self-locking hexagon bolt, 35 Nm

- ❑ Renew

12 - Guide pin

13 - Self-locking combi-bolt, 125 Nm

14 - Protective cap

15 - Hexagon socket head bolt, 10 Nm

16 - ABS speed sensor

- ❑ Before inserting sensor, clean inner surface of fitting hole and coat with lubricating paste G 000 650

1.5 Removing and installing brake pads, Girling/Lucas brake caliper

Special tools and workshop equipment required

- ♦ Torque wrench -V.A.G 1331-

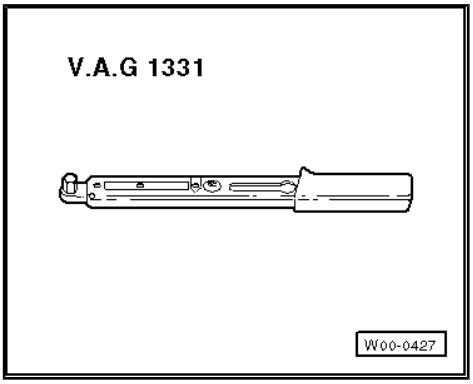

Protected by copyright. Copying for private or commercial purposes, in part or in whole, is not permitted unless authorised by Volkswagen AG. Volkswagen AG does not guarantee or accept any liability with respect to the correctness of information in this document. Copyright by Volkswagen AG.
satelettronica

♦ Piston resetting tool -T10145-

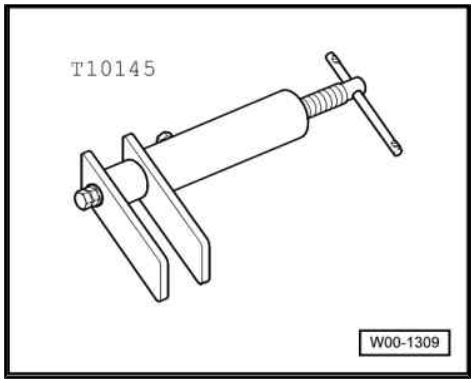

1.5.1 Removing

– Remove wheels.

– Unscrew lower securing bolt on brake caliper. Counterhold on guide pin for this.

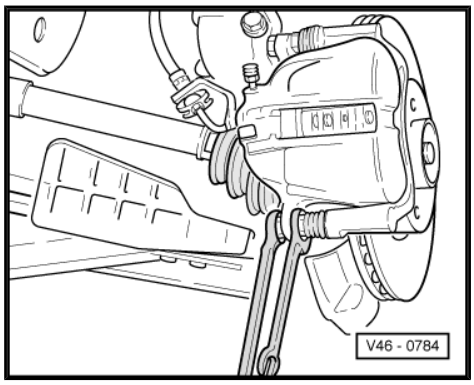

– Swing brake caliper upwards.

– Remove brake pads.

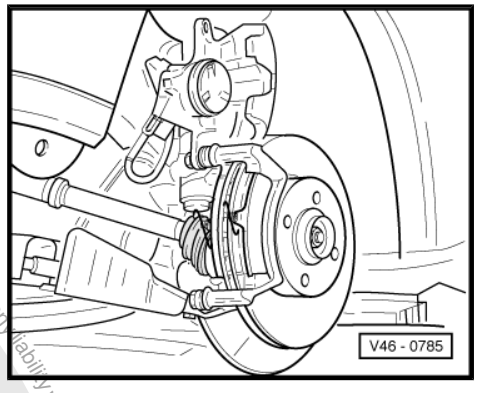

Cleaning

> ⚠ **WARNING**
>
> ***Do not use compressed air on brake system, the dust thereby produced is hazardous to health!***

– Throughly clean brake carrier and contact surfaces for brake pads and remove corrosion.

– Clean brake caliper.

Use only methylated spirits for cleaning the brake caliper housing.

Protected by copyright. Copying for private or commercial purposes, in part or in whole, not permitted unless authorised by Volkswagen AG. Volkswagen AG does not guarantee or accept any liability with respect to the correctness of information in this document. Copyright by Volkswagen AG.
satelettronica

1.5.2 Installing

Before pressing piston back into cylinder with piston resetting tool, draw off brake fluid from brake fluid reservoir. Otherwise, particularly if reservoir has been topped up, fluid will overflow and cause damage.

– Press pistons back with piston resetting appliance -T10145- .

– Insert brake pads.

– Swing brake caliper downward, and tighten hexagon bolts.

♦ The repair kit includes four self-locking hexagon bolts which must be installed in all cases.

– Install wheels.

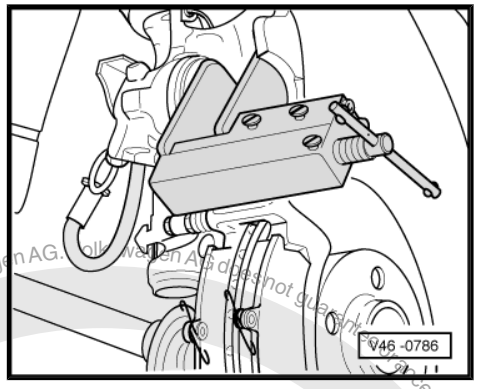

Note

♦ *After changing brake pads, firmly depress brake pedal several times with vehicle stationary, so that the brake pads are properly seated in their normal operating position.*

♦ *After changing brake pads check brake fluid level.*

Specified torques	
Brake caliper to brake carrier	35 Nm

Protected by copyright. Copying for private or commercial purposes, in part or in whole, is not permitted unless authorised by Volkswagen AG. Volkswagen AG does not guarantee or accept any liability with respect to the correctness of information in this document. Copyright by Volkswagen AG.
satelettronica

2 Repairing rear brakes, drum brakes

Special tools and workshop equipment required

- Torque wrench -V.A.G 1331-
- Torque wrench -V.A.G 1332-
- Torque wrench -V.A.G 1410-
- Brake pedal depressor -V.A.G 1869/2-

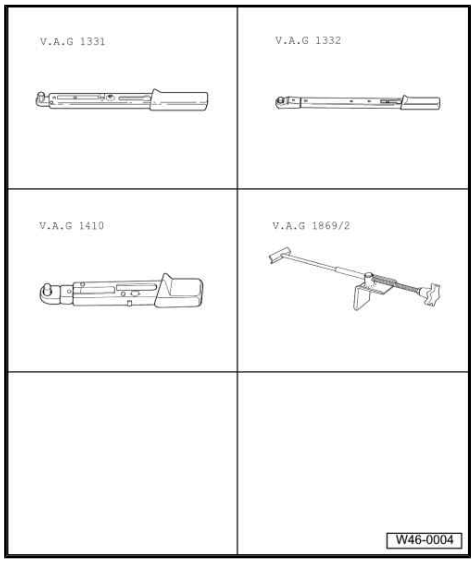

2.1 Removing and installing brake drum, up to 09.99

Note

- *After replacing a wheel cylinder, a backplate and brake linings, depress brake pedal firmly once with vehicle stationary so that the brake linings are properly seated in their normal operating position.*
- *After work for which the brake system had to be opened, bleed the brake system with brake filling and bleeding unit - VAS 5234- or extraction unit -V.A.G 1869/4- .*
- *Before removing a wheel brake cylinder, brake carrier or disconnecting a brake line from the wheel brake cylinder, fit brake pedal actuator -V.A.G 1869/2- (release pressure in system for this).*

Protected by copyright. Copying for private or commercial purposes, in part or in whole, is not permitted unless authorised by Volkswagen AG. Volkswagen AG does not guarantee or accept any liability with respect to the correctness of information in this document. Copyright by Volkswagen AG.
satelettronica

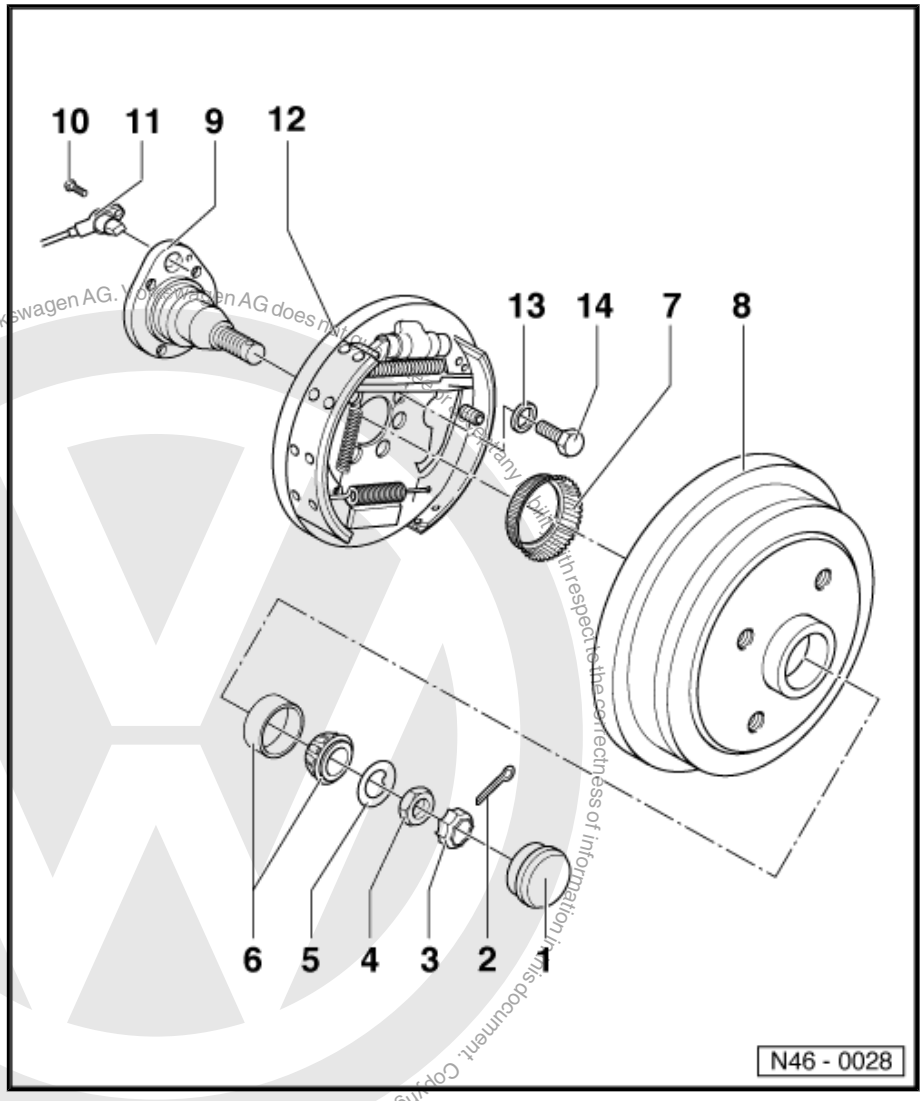

1 - Grease cap

- ❑ Pressing off and driving in ⇒ Running gear, axles, steering; Rep. Gr. 42 ; Repairing wheel bearings

2 - Split pin

- ❑ Renew

3 - Locking ring

4 - Hexagon nut

- ❑ Adjusting wheel bearing play ⇒ Running gear, axles, steering; Rep. Gr. 42 ; Repairing wheel bearings

5 - Thrust washer

6 - Outer wheel bearing

7 - ABS speed sensor rotor

8 - Brake drum

- ❑ Vehicles with no ABS, 180 mm ∅
- ❑ Wear limit 181.5 mm ∅
- ❑ Vehicles with ABS, 200 mm ∅
- ❑ Wear limit 201.5 mm ∅
- ❑ Release adjustment before removing brake drum, ⇒ page 61
- ❑ Clean thoroughly, check for wear, damage, tolerances, damaged wheel bolt threads and perfect braking surface
- ❑ Fill hub with multi-purpose grease

9 - Stub axle

10 - Hexagon socket head bolt, 10 Nm

11 - Speed sensor

- ❑ Only vehicles with ABS
- ❑ Before inserting sensor, clean inner surface of fitting hole and coat with lubricating paste G 000 650

12 - Brake backplate with brake shoes

- ❑ Release adjustment before removing brake drum, ⇒ page 61

13 - Dished spring

- ❑ Larger contact surface to brake backplate

14 - Hexagon bolt, 60 Nm

satelettronica

2.2 Removing and installing brake drum, as of 10.99

Note

- *After replacing a wheel cylinder, a backplate and brake linings, depress brake pedal firmly once with vehicle stationary so that the brake linings are properly seated in their normal operating position.*
- *After work for which the brake system had to be opened, bleed the brake system with brake filling and bleeding unit - VAS 5234- or extraction unit -V.A.G 1869/4- .*
- *Before removing a wheel brake cylinder, brake carrier or disconnecting a brake line from the wheel brake cylinder, fit brake pedal actuator -V.A.G 1869/2- (release pressure in system for this).*

Protected by copyright. Copying for private or commercial purposes, in part or in whole, is not permitted unless authorised by Volkswagen AG. Volkswagen AG does not guarantee or accept any liability with respect to the correctness of information in this document. Copyright by Volkswagen AG.

1 - Cross-head screw

2 - Brake drum

- ❑ Vehicles with no ABS, 180 mm ∅
- ❑ Wear limit 181.5 mm ∅
- ❑ Vehicles with ABS, 200 mm ∅
- ❑ Wear limit 201.5 mm ∅
- ❑ Release adjustment before removing brake drum, ⇒ page 61
- ❑ Clean thoroughly, check for wear, damage, tolerances, damaged wheel bolt threads and perfect braking surface
- ❑ Fill hub with multi-purpose grease

3 - Dust cap

- ❑ Pressing off and driving in ⇒ Running gear, axles, steering; Rep. Gr. 42 ; Repairing wheel bearings

4 - Twelve-point nut

- ❑ See ⇒ Running gear, axles, steering; Rep. Gr. 42 ; Repairing wheel

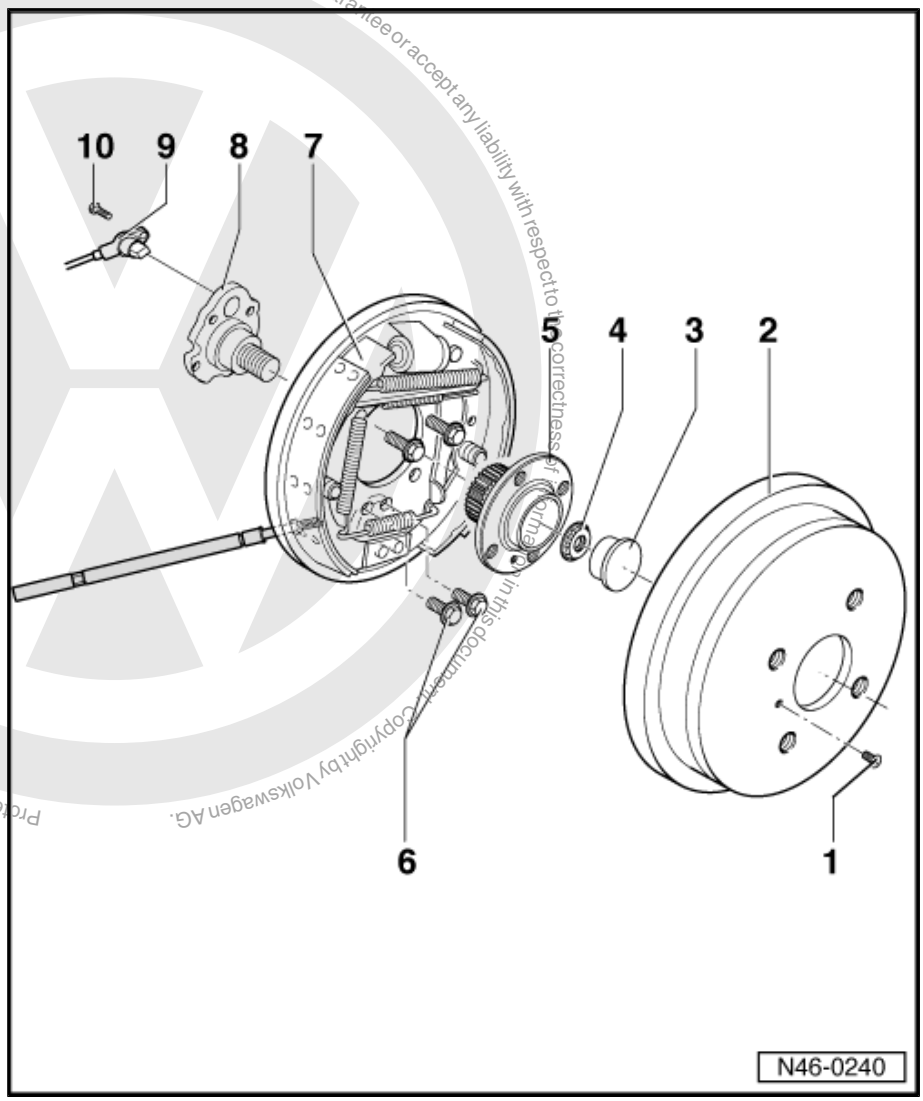

satelettronica

bearings

5 - Wheel hub with wheel bearing and rotor

6 - Hexagon bolt, 60 Nm

7 - ABS speed sensor rotor

7 - Brake backplate with brake shoes

- ❑ Release adjustment before removing brake drum, ⇒ page 61

8 - Stub axle

9 - Speed sensor

- ❑ Only vehicles with ABS
- ❑ Before inserting sensor, clean inner surface of fitting hole and coat with lubricating paste G 000 650

10 - Hexagon socket head bolt, 10 Nm

2.3 Releasing brake shoe adjustment

– Insert a screwdriver through a wheel bolt threaded hole in the brake drum and push the wedge upwards.

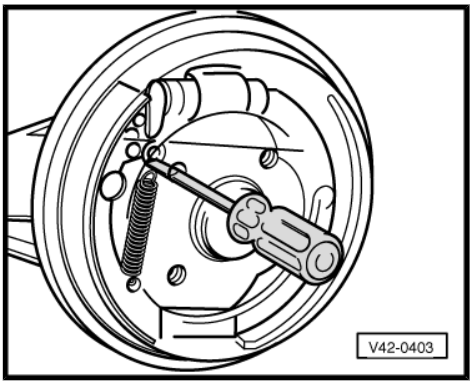

Cleaning

> ⚠ WARNING
>
> *Do not use compressed air on brake system, the dust thereby produced is hazardous to health!*

2.4 Repairing brake drum

After working on the rear wheel brakes:

- ♦ Release handbrake.
- ♦ Firmly depress brake pedal once.

Protected by copyright. Copying for private or commercial purposes, in part or in whole, is not permitted unless authorised by Volkswagen AG. Volkswagen AG does not guarantee or accept any liability with respect to the correctness of information in this document. Copyright by Volkswagen AG.
satelettronica

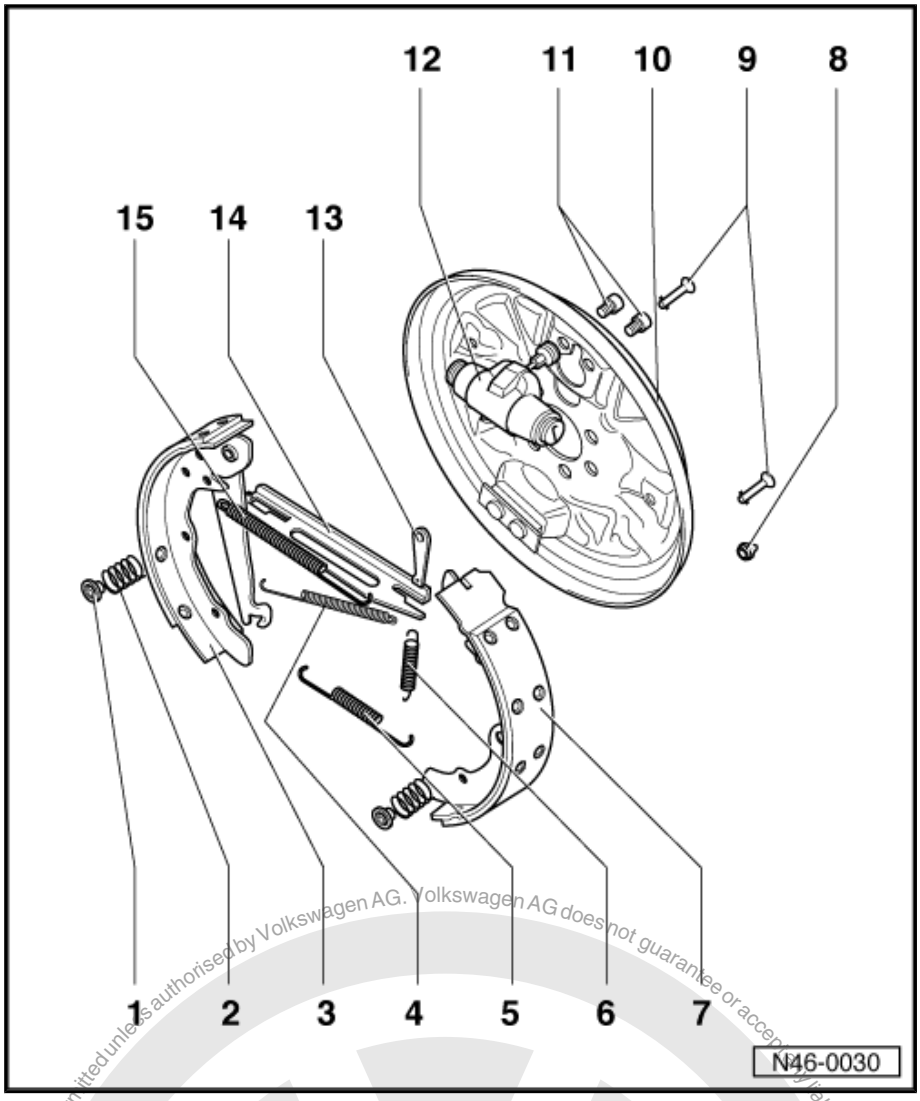

1 - Spring plate

- ❑ To remove, push against the spring and turn through 90°

2 - Spring

3 - Brake shoe with lever for handbrake

- ❑ Removing and installing ⇒ page 63
- ❑ Adjust handbrake ⇒ page 64

4 - Upper return spring

- ❑ Unhook with special tool 3438

5 - Lower return spring

- ❑ Grease contact surfaces with lubricant paste, part No. G 000 650

6 - Spring

7 - Brake shoes

- ❑ Removing and installing ⇒ page 63
- ❑ Minimum lining thickness 2.5 mm
- ❑ Checking thickness ⇒ Maintenance ; Booklet 28 ; Work sequences; Front and rear brake pads/linings: Checking thickness

Brake linings can also be supplied without the metal brake shoe

8 - Cap

- ❑ Remove to check brake lining thickness

9 - Shoe steady pin

10 - Brake carrier

11 - Hexagon socket head bolt, 10 Nm

12 - Wheel cylinder

- ❑ Check for leaks ⇒ page 63
- ❑ Aluminium wheel brake cylinders are secured with just one bolt
- ❑ Aluminium wheel brake cylinders can be retrofitted
- ❑ Mixed installation is permissible

13 - Wedge

- ❑ To remove and install the brake drum, push upwards through a threaded wheel bolt hole ⇒ page 61

14 - Push rod

- ❑ Grease contact surfaces with lubricant paste, part No. G 000 650

15 - Locating spring

- ❑ Unhook with special tool 3438

Protected by copyright. Copying for private or commercial purposes, in part or in whole, is not permitted unless authorised by Volkswagen AG. Volkswagen AG does not guarantee or accept any liability with respect to the correctness of information in this document. Copyright by Volkswagen AG.
satelettronica

Checking wheel cylinder for leaks

– Lift dust boot.
– If brake fluid is found in the dust boot, renew wheel cylinder.

Ensure the dust boot is not damaged when lifting off.

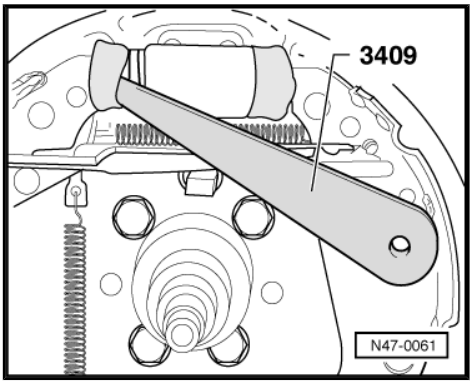

2.5 Removing and installing brake shoes

Special tools and workshop equipment required

♦ Hook -3438-

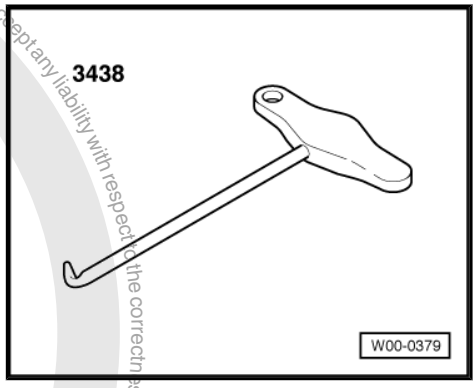

2.5.1 Removing

– Remove brake drum ⇒ page 58 .
– Remove spring plate.
– Unhook lower return spring.
– Remove brake shoes.
– Unhook handbrake cable.
– Clamp brake shoes in vice.
– Remove spring -1- for wedge -2-.
– Remove upper return spring -3- with special tool 3438.

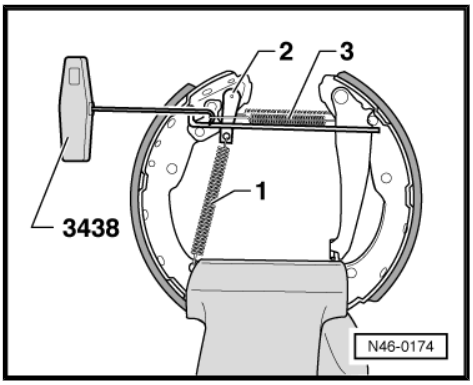

Volkswagen AG. Volkswagen AG does not guarantee or accept any liability with respect to the correctness of information in this document. Copyright by Volkswagen AG. Published by copyright owner. Copying for private or commercial purposes, in part or in whole, is not permitted unless authorised by Volkswagen AG.
satelettronica

– Unhook locating spring -1- with special tool 3438.
– Take push rod -2- and wedge -3- off brake shoe.

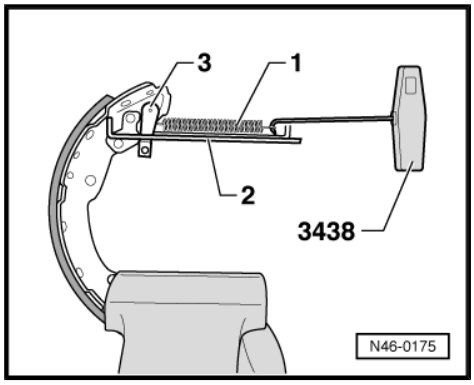

2.5.2 Installing

– Hook locating spring -1- into push rod-2- with special tool 3438.
– Insert wedge -3- at same time.

Installation position:

Raised portion -arrow- must remain visible when installing.

– Insert brake shoe with brake lever in push rod.

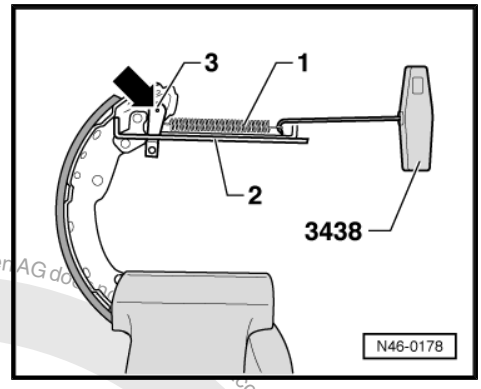

– Connect return spring -3- with special tool 3438.
– Attach spring -1- for wedge -2-.
– Seat brake shoes on wheel cylinder pistons.
– Connect handbrake cable to brake lever.
– Connect lower return spring and lift brake shoes onto lower support.
– Attach spring for wedge.
– Fit springs and spring plates.
– Install brake drum and adjust wheel bearing play ⇒ Running gear, axles, steering; Rep. Gr. 42 ; Repairing wheel bearing .
– Firmly depress brake pedal once, this adjusts the rear brakes.

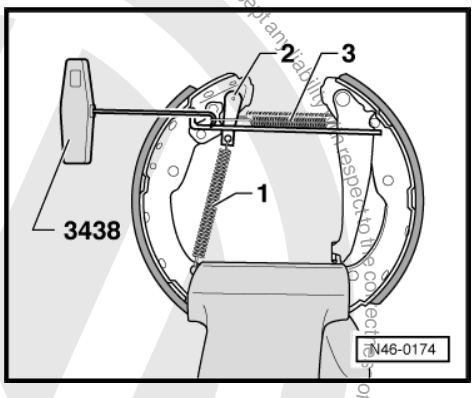

2.6 Adjusting handbrake

A new adjustment is only necessary when the handbrake cable, brake carrier or brake pads/linings are renewed.

– Release handbrake.
– Remove handbrake lever trim ⇒ General body repairs, interior; Rep. Gr. 68 ; Compartments, covers and trims .
– Firmly depress brake pedal once.
– Pull handbrake lever on four notches.

Protected by copyright. Copying for private or commercial purposes, in part or in whole, is not permitted unless authorised by Volkswagen AG. Volkswagen AG does not guarantee or accept any liability with respect to the correctness of information in this document. Copyright by Volkswagen AG.
satelettronica

– Tighten adjusting nuts -arrows- until both wheels are difficult to turn by hand.
– Release handbrake and check that both wheels turn freely. If required turn adjusting nuts back slightly.

Due to the automatic rear wheel brake adjustment there is no requirement to adjust the handbrake after making new/initial adjustment.

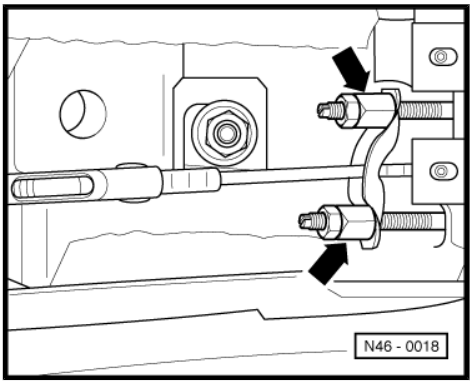

2.6.1 Checking handbrake

– Raise vehicle.
– Pull handbrake lever on three notches.
– Wheels must not be able to be turned by hand.
– Release handbrake and check that both wheels turn freely.

Protected by copyright. Copying for private or commercial purposes, in part or in whole, is not permitted unless authorised by Volkswagen AG. Volkswagen AG does not guarantee or accept any liability with respect to the correctness of information in this document. Copyright by Volkswagen AG.
satelettronica

3 Repairing rear brakes (disc brakes)

Special tools and workshop equipment required

- Thrust piece -3456-
- Torque wrench -V.A.G 1331-
- Torque wrench -V.A.G 1332-
- Torque wrench -V.A.G 1410-
- Brake pedal depressor -V.A.G 1869/2-

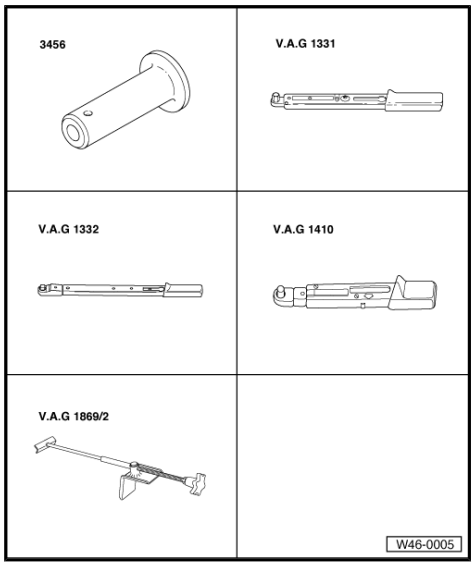

3.1 Removing and installing disc brake

Note

- *After changing brake pads, firmly depress brake pedal several times with vehicle stationary, so that the brake pads are properly seated in their normal operating position.*
- *After work for which the brake system had to be opened, bleed the brake system with brake filling and bleeding unit - VAS 5234- or extraction unit -V.A.G 1869/4- .*
- *Before removing a brake caliper or disconnecting a brake hose from brake caliper, fit brake pedal depressor -V.A.G 1869/2- (release pressure in system for this).*

Illustration for vehicles with wheel bearing to 09.99

The wheel bearings for vehicles as of 10.99 is identical to vehicles with drum brakes as of 10.99 ⇒ page 60 .

Protected by copyright. Copying for private or commercial purposes, in part or in whole, is not permitted unless authorised by Volkswagen AG. Volkswagen AG does not guarantee or accept any liability with respect to the correctness of information in this document. Copyright by Volkswagen AG.
satelettronica

1 - Stub axle

2 - Cover plate

3 - Dished spring
- ❑ Larger contact surface faces towards cover plate

4 - Hexagon bolt, 60 Nm

5 - Cover ring
- ❑ Driving in ⇒ page 69

6 - Speed sensor rotor
- ❑ Drive off using a drift through a wheel bolt hole
- ❑ Drive on using a suitable sleeve

7 - Seal

8 - Inner wheel bearing

9 - Brake disc
- ❑ Thickness 10 mm
- ❑ Wear limit 8 mm
- ❑ When worn, always renew both sides
- ❑ Brake disc assembly sequence (brake disc run-

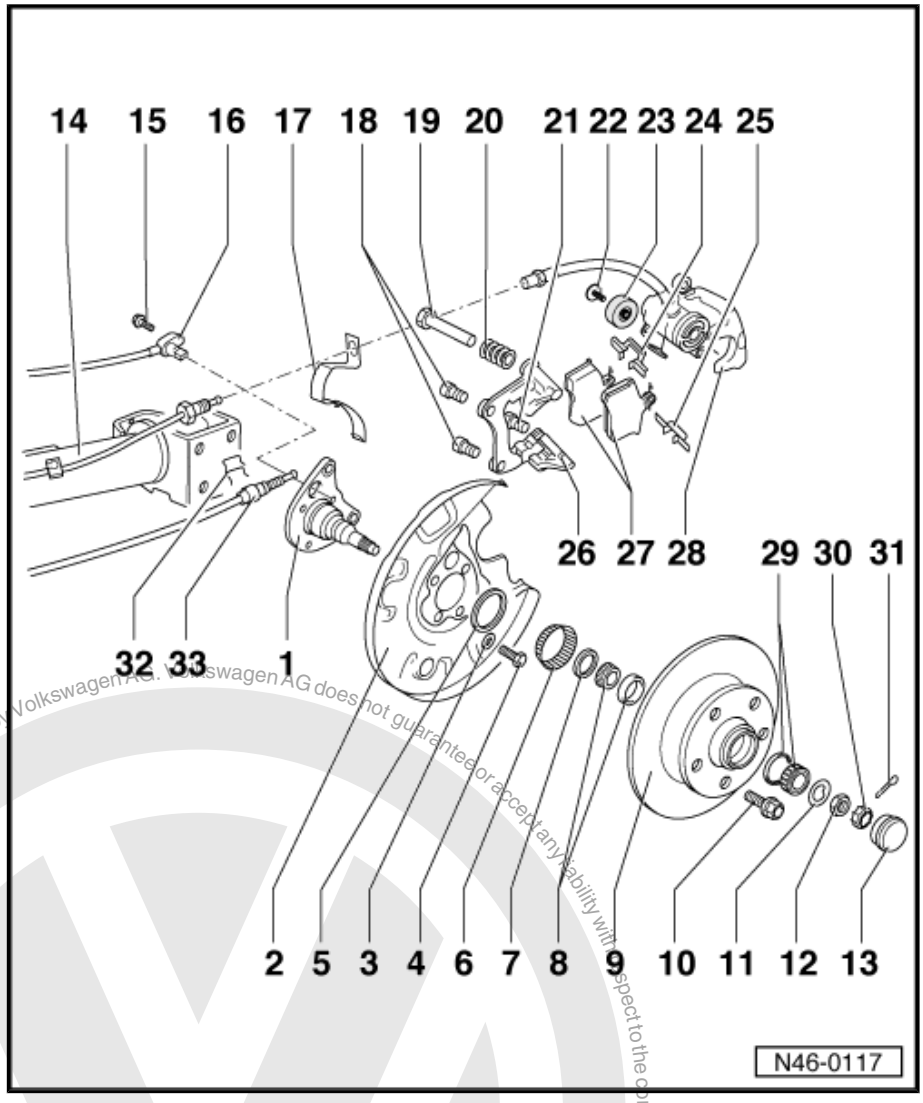

Protected by copyright. Copying for private or commercial purposes, in part or in whole, is not permitted unless authorised by Volkswagen AG. Volkswagen AG does not guarantee or accept any liability with respect to the correctness of information in this document. Copyright by Volkswagen AG.
satelettronica

in)
- ❑ Brake caliper
- ❑ Brake pads
- ❑ Brake carrier

10 - Wheel bolt, 110 Nm

11 - Thrust washer

12 - Hexagon nut
- ❑ Adjusting wheel bearing play for vehicles up to 09.99 ⇒ Running gear, axles, steering; Rep. Gr. 42 ; Repairing wheel bearings
- ❑ Secure with locking ring and new split pin

13 - Grease cap

14 - Axle beam

15 - Hexagon socket head bolt, 10 Nm

16 - ABS speed sensor
- ❑ Before inserting sensor, clean inner surface of fitting hole and coat with lubricating paste G 000 650

17 - Bracket for brake hose

18 - Hexagon socket head bolt, 65 Nm

19 - Guide pin

20 - Protective cap

21 - Self-locking bolt, 35 Nm
- ❑ Renew
- ❑ When loosening and tightening, counterhold on guide pin

22 - Hexagon bolt, 23 Nm

23 - Vibration damper

24 - Upper pad retaining springs
- ❑ Renew when renewing pads

25 - Lower pad retaining springs
- ❑ Renew when renewing pads

26 - Brake carrier with guide pins and protective caps
- ❑ Replacement carriers are supplied assembled and with sufficient grease on guide pins
- ❑ If protective caps or guide pins are damaged, renew using repair kit. Use grease sachet supplied to lubricate guide pins

27 - Brake pads
- ❑ Thickness 12 mm not including backplate
- ❑ Checking thickness:⇒ Maintenance ; Booklet 28
- ❑ Wear limit: 2 mm excluding backing plate
- ❑ Always renew both sides
- ❑ Removing and installing ⇒ page 69

Protected by copyright. Copying for private or commercial purposes, in part or in whole, is not permitted unless authorised by Volkswagen AG. Volkswagen AG does not guarantee or accept any liability with respect to the correctness of information in this document. Copyright by Volkswagen AG.
satelettronica

28 - Brake caliper

- ❑ Do not disconnect brake hose when changing brake pads
- ❑ Removing:
- ❑ Remove brake pads -item ⇒ Item 27 (page 68) - ⇒ page 69
- ❑ Fit brake pedal depressor -V.A.G 1869/2-
- ❑ Unscrew brake hose from brake caliper
- ❑ Installing:
- ❑ Install brake pads -item ⇒ Item 27 (page 68) - ⇒ page 71
- ❑ Screw on brake hose with brake caliper
- ❑ Remove brake pedal depressor -V.A.G 1869/2-
- ❑ Bleed brake system ⇒ page 95
- ❑ Repairing ⇒ page 88
- ❑ Adjust handbrake cable first after repairing or replacement
- ❑ Adjust handbrake ⇒ page 72
- ❑ If brake caliper is renewed ⇒ Old vibration damper can be reused

29 - Outer wheel bearing

30 - Locking ring

31 - Split pin

32 - Spring clip

33 - Handbrake cable

- ❑ Adjust handbrake ⇒ page 72

Driving in cover ring

– Drive cover ring on with thrust piece -3456- .

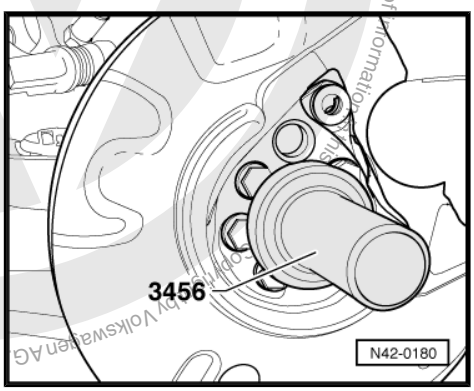

3.2 Removing and installing brake pads

Special tools and workshop equipment required

♦ Resetting and removal tool 3272

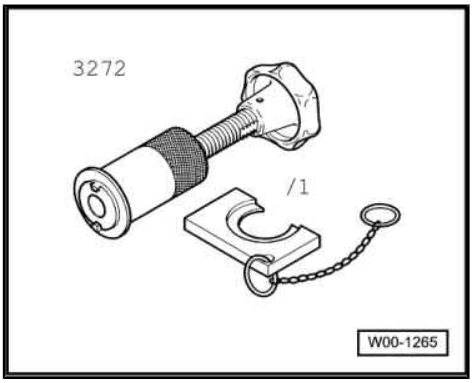

Protected by copyright. Copying for private or commercial purposes, in part or in whole, is not permitted unless authorised by Volkswagen AG. Volkswagen AG does not guarantee or accept any liability with respect to the correctness of information.
satelettronica

♦ Torque wrench -V.A.G 1331-

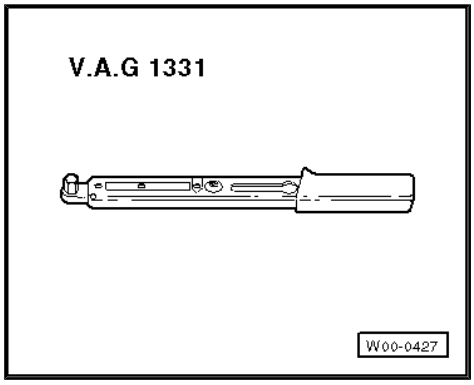

3.2.1 Removing

Mark brake pads when removing if they are to be reused. Reinstall in their original position to prevent uneven braking.

– Remove wheels.

– Remove clip -1-.

– Press brake lever -2- in direction of arrow and detach hand-brake cable -3-.

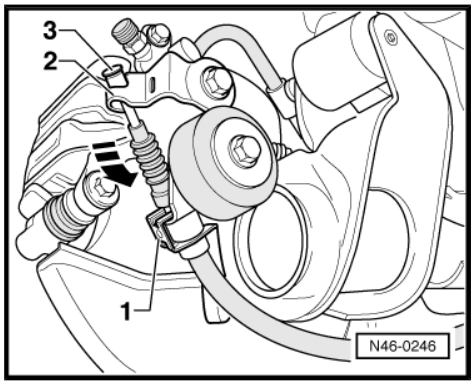

– Unscrew securing bolts for brake caliper housing.

– Remove brake pads and pad retaining springs.

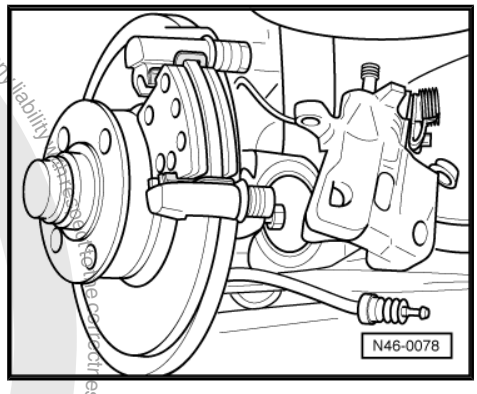

Cleaning

> ⚠ **WARNING**
>
> ***Do not use compressed air on brake system, the dust thereby produced is hazardous to health!***

– Throughly clean brake carrier and contact surfaces for brake pads and remove corrosion.

– Clean brake caliper, in particular the bonding surface for the brake pad. It must be free of adhesive and grease residues.

Use only methylated spirits for cleaning the brake caliper housing.

Protected by copyright. Copying for private or commercial purposes, in part or in whole, is not permitted unless authorised by Volkswagen AG. Volkswagen AG does not guarantee or accept any liability with respect to the correctness of information in this document. Copyright by Volkswagen AG.
satelettronica

3.2.2 Installing

Before pressing piston back into cylinder with piston resetting tool, draw off brake fluid from brake fluid reservoir. Otherwise, particularly if reservoir has been topped up, fluid will overflow and cause damage.

– Screw in piston by turning knurled wheel of resetting and removal tool 3272 clockwise, do not damage protective cap when doing this.

♦ Fit resetting and removal tool 3272 so that collar -arrow- of tool rests on brake caliper.

♦ If piston is difficult to move, use a 13 mm open jaw spanner on flats -arrow A- provided for this purpose.

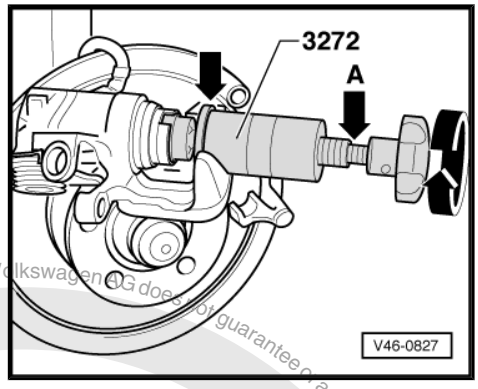

– Insert brake pads and brake pad retaining springs -arrows- into brake carrier.

– Pull protective foil off brake pad backplate.

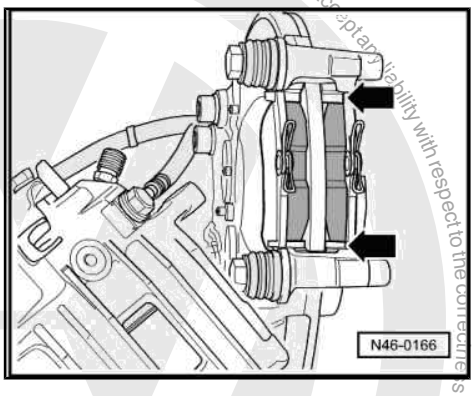

– Secure brake caliper with new self-locking bolts.

♦ The repair kit includes four self-locking hexagon bolts which must be installed in all cases.

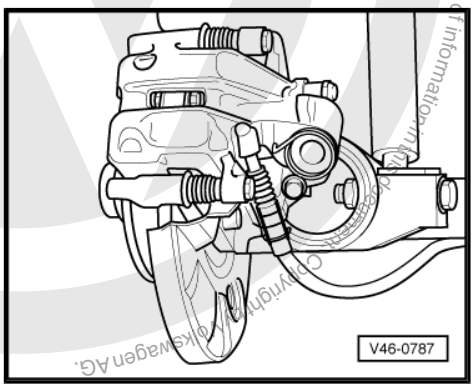

– Secure handbrake cable on brake caliper -arrow-.

– Adjust handbrake ⇒ page 72 .

– Install wheels.

♦ After changing brake pads, firmly depress brake pedal several times with vehicle stationary, so that the brake pads are properly seated in their normal operating position.

♦ After changing brake pads check brake fluid level.

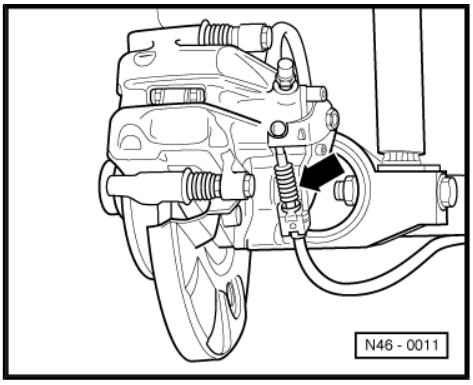

Protected by copyright. Copying for private or commercial purposes, in part or in whole, is not permitted unless authorised by Volkswagen AG. Volkswagen AG does not guarantee or accept any liability with respect to the correctness of information.
Copyright by Volkswagen AG.
satelettronica

3.3 Adjusting handbrake

A new adjustment is only necessary after renewing, handbrake cables, brake calipers and brake discs.

– Remove handbrake lever trim ⇒ General body repairs, interior; Rep. Gr. 68 ; Compartments, covers and trims .

– Handbrake lever in released position. Tighten adjusting nuts -1- until lever on brake caliper lifts off stop.

– Lock adjusting nut with hexagon lock nut.

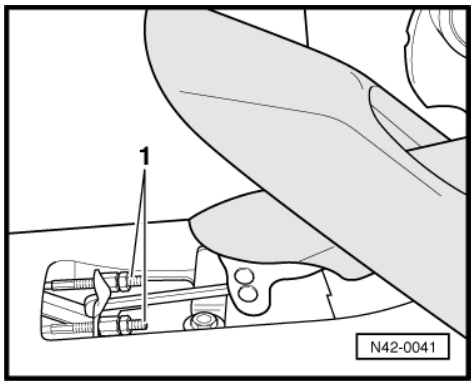

– A gap of max. 1.5 mm from stop -arrow- is permissible each side, gap should be the same on both sides.

1 - Feeler gauge

– Pull handbrake on three times and then release again.

– Check that both wheels turn freely.

Due to the automatic rear wheel brake adjustment there is no requirement to adjust the handbrake after making new/initial adjustment.

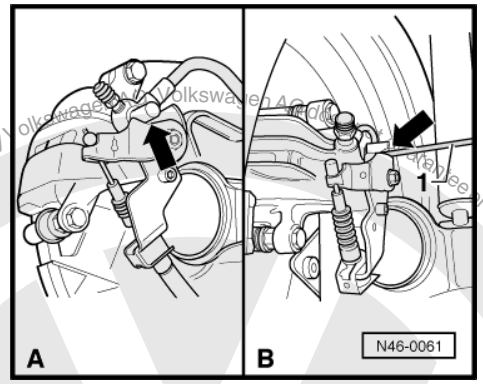

3.3.1 Checking handbrake

– Raise vehicle.

– Pull handbrake lever on three notches.

– Wheels must not be able to be turned by hand.

– Release handbrake and check that both wheels turn freely.

Protected by copyright. Copying for private or commercial purposes, in part or in whole, is not permitted unless authorised by Volkswagen AG. Volkswagen AG does not guarantee or accept any liability with respect to the correctness of information in this document. Copyright by Volkswagen AG.
satelettronica

4 Removing and installing handbrake cable (drum brakes)

Removing

– Remove handbrake lever trim ⇒ General body repairs, interior; Rep. Gr. 68 ; Compartments, covers and trims .

– Release handbrake.

– Unscrew adjustment nut -arrow- so that the handbrake cable can be unhooked from the compensator.

– Raise vehicle.

– Remove wheel.

– Remove brake drum.

– Unhook handbrake cable.

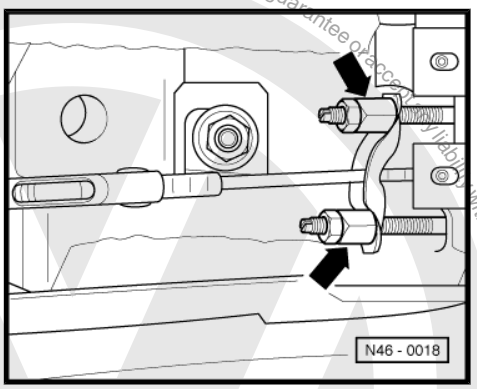

– Unclip handbrake cable from retainer on rear axle -arrow A- and unhook from retainer -arrow-.

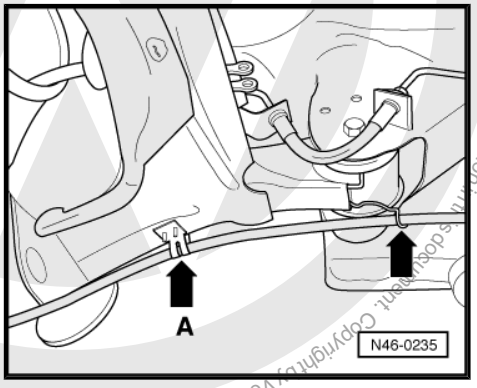

– Unhook handbrake cable from retainer -arrow-.

– Pull handbrake cable out from guide tube -1- in direction of arrow.

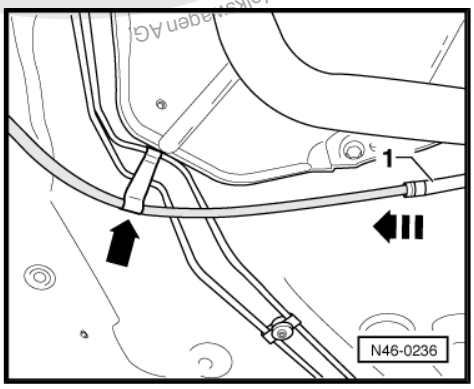

Installing

– Slide handbrake cable into guide tube -1- in direction of arrow.

– Hook handbrake cable into retainer -arrow-.

– Connect handbrake cable to brake lever.

– Install brake drum.

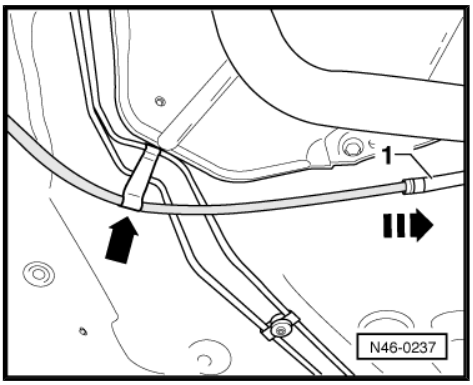

Protected by copyright. Copying for private or commercial purposes, in part or in whole, is not permitted unless authorised by Volkswagen AG. Volkswagen AG does not guarantee or accept any liability with respect to the correctness of information in this document. Copyright by Volkswagen AG.
satelettronica

– Clip handbrake cable into retainer on rear axle -arrow A-.
– Handbrake cable clamping ring must lie in the middle of the clip.
– Hook handbrake cable into retainer -arrow-.
– Slide handbrake cable into compensator.

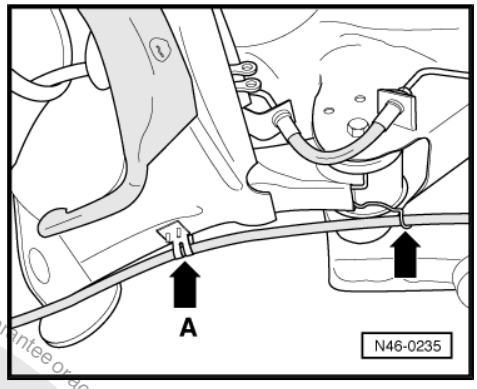

– Pretension handbrake cable with adjustment nut -arrows-.
– Adjust handbrake ⇒ page 64 .
– Install handbrake lever trim ⇒ General body repairs, interior; Rep. Gr. 68 ; Compartments, covers and trims .

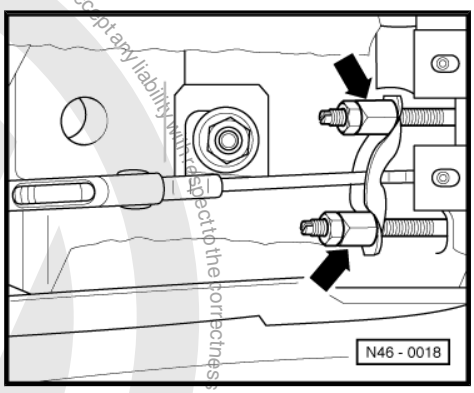

Protected by copyright. Copying for private or commercial purposes, in part or in whole, is not permitted unless authorised by Volkswagen AG. Volkswagen AG does not guarantee or accept any liability with respect to the correctness of information in this document. Copyright by Volkswagen AG.
satelettronica

5 Removing and installing handbrake cable (disc brakes)

Removing

– Remove handbrake lever trim ⇒ General body repairs, interior; Rep. Gr. 68 ; Compartments, covers and trims .

– Release handbrake.

– Unscrew adjustment nut -arrow- so that the handbrake cable can be unhooked from the compensator.

– Raise vehicle.

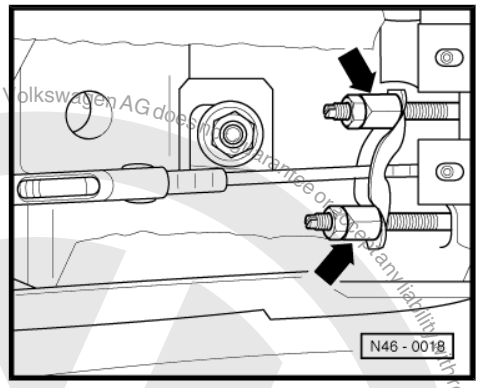

– Remove clip -1-.

– Press brake lever -2- in direction of arrow and detach handbrake cable -3-.

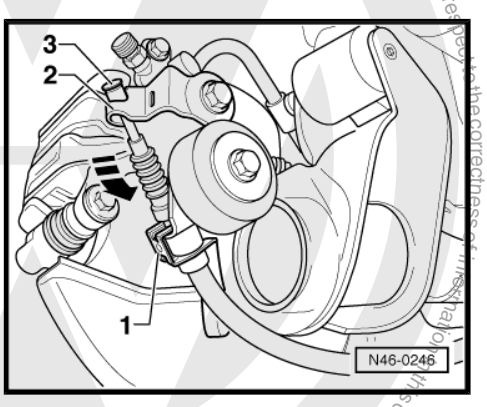

– Unclip handbrake cable from retainer on rear axle -arrow A- and unhook from retainer -arrow-.

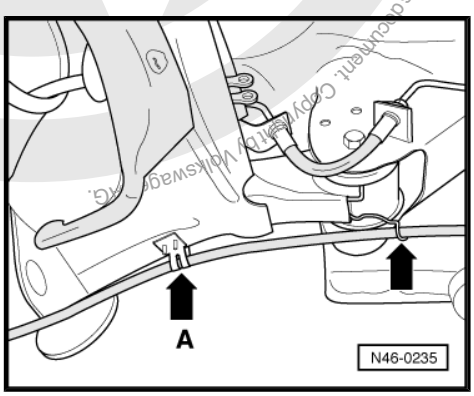

– Unhook handbrake cable from retainer -arrow-.

– Pull handbrake cable out from guide tube -1- in direction of arrow.

Installing

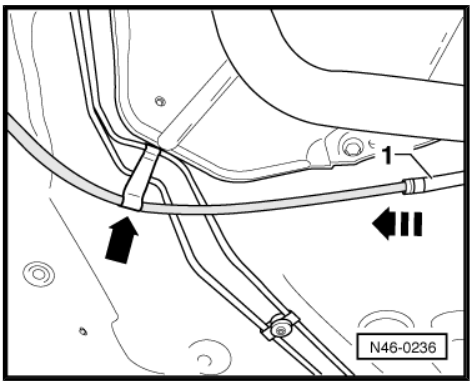

Protected by copyright. Copying for private or commercial purposes, in part or in whole, is not permitted unless authorised by Volkswagen AG. Volkswagen AG does not guarantee or assume any liability with respect to the correctness of information in this document. Copyright by Volkswagen AG.
satelettronica

– Slide handbrake cable into guide tube -1- in direction of arrow.
– Hook handbrake cable into retainer -arrow-.

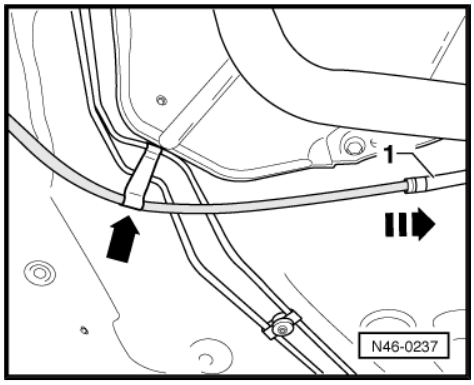

– Press brake lever -2- in direction of arrow and attach handbrake cable -3-.
– Install clip -1-.

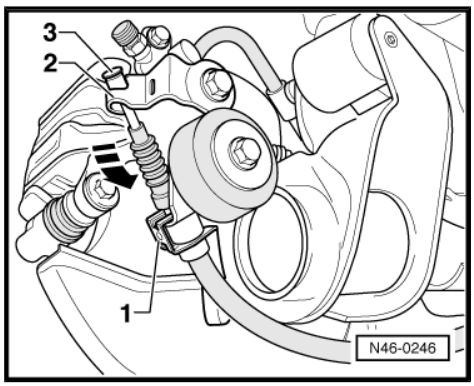

– Clip handbrake cable into retainer on rear axle -arrow A-.
– Handbrake cable clamping ring must lie in the middle of the clip.
– Hook handbrake cable into retainer -arrow-.
– Slide handbrake cable into compensator.

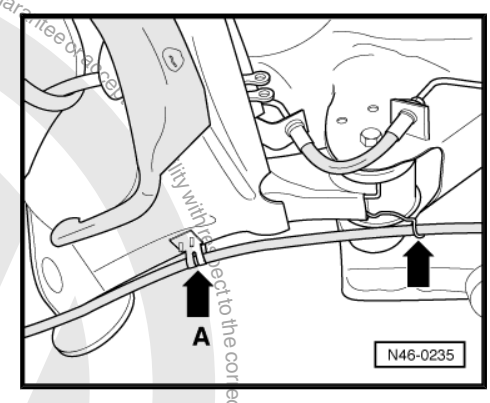

– Pretension handbrake cable with adjustment nut -arrows-.
– Adjust handbrake ⇒ page 72 .
– Install handbrake lever trim ⇒ General body repairs, interior; Rep. Gr. 68 ; Compartments, covers and trims .

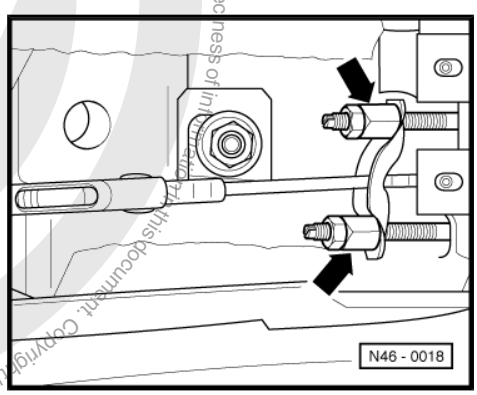

Protected by copyright. Copying for private or commercial purposes, in part or in whole, is not permitted unless authorised by Volkswagen AG. Volkswagen AG does not guarantee the correctness of information in this document. Copyright by Volkswagen AG.
satelettronica

6 Assembly overview - handbrake lever

1 - Handbrake lever

2 - Handle

- ❑ Press down locking lug underneath handle using a small screwdriver and pull off forwards

3 - Handbrake cover

- ❑ Pull off upwards

4 - Hexagon nut, 25 Nm

5 - Compensator

6 - Handbrake cable

- ❑ Removing and installing (drum brakes) ⇒ page 73
- ❑ Removing and installing (disc brakes) ⇒ page 75

7 - Adjusting nut

- ❑ Adjusting handbrake:
- ❑ Vehicles with drum brakes ⇒ page 64
- ❑ Vehicles with disc brakes ⇒ page 72

8 - Hexagon nut

- ❑ Lock using adjusting nut

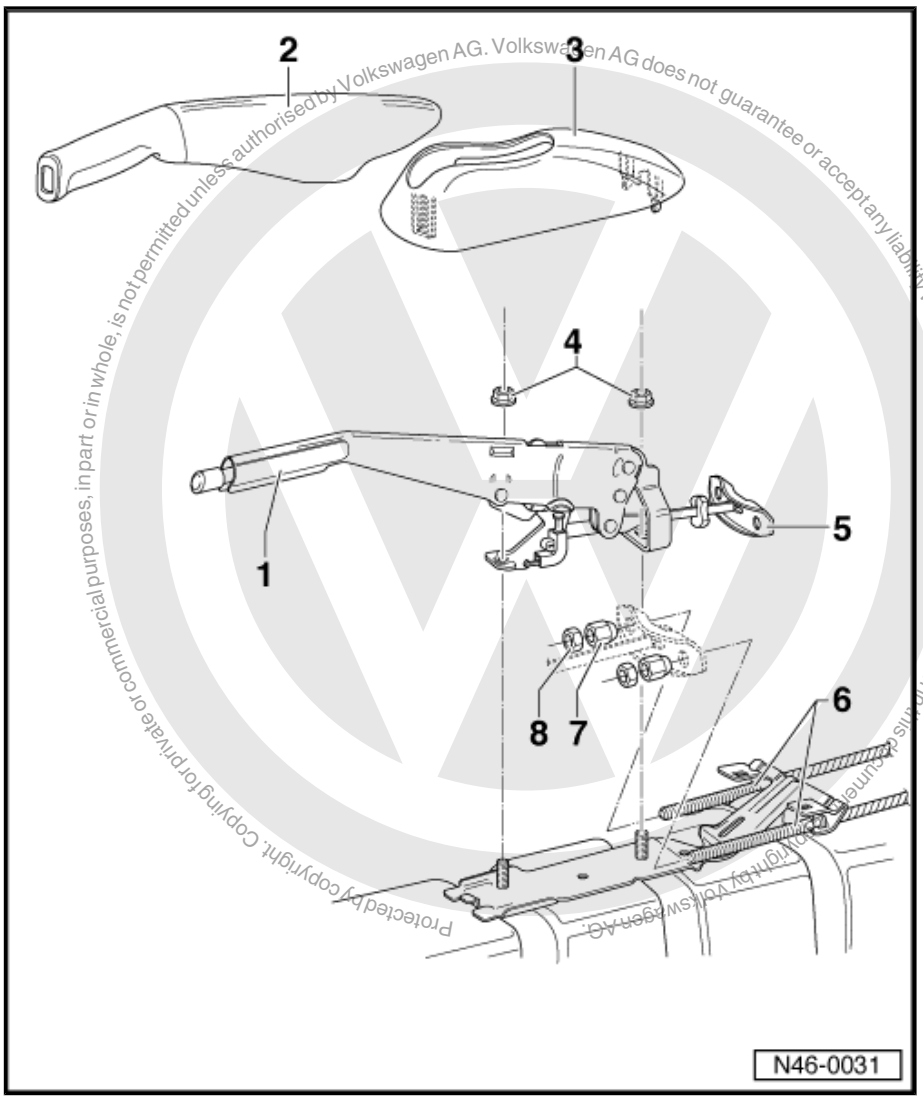

Protected by copyright. Copying for private or commercial purposes, in part or in whole, is not permitted unless authorised by Volkswagen AG. Volkswagen AG does not guarantee or accept any liability with respect to the correctness of information in this document copyright by Volkswagen AG.

satelettronica

Handbrake cable installation position

- The handbrake cable is secured on the axle beam with clips.
- Handbrake cable clamping ring -arrow A- must lie in the middle of the clip -arrow B-.

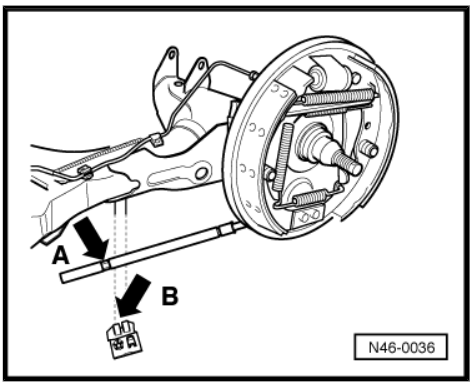

Protected by copyright. Copying for private or commercial purposes, in part or in whole, is not permitted unless authorised by Volkswagen AG. Volkswagen AG does not guarantee or accept any liability with respect to the correctness of information in this document. Copyright by Volkswagen AG

7 Assembly overview - brake pedal

> ⚠ **WARNING**
>
> ***The brake pedal travel must not be restricted by additional floor coverings.***

Grease all mountings before installing with grease Part No. G 000 602

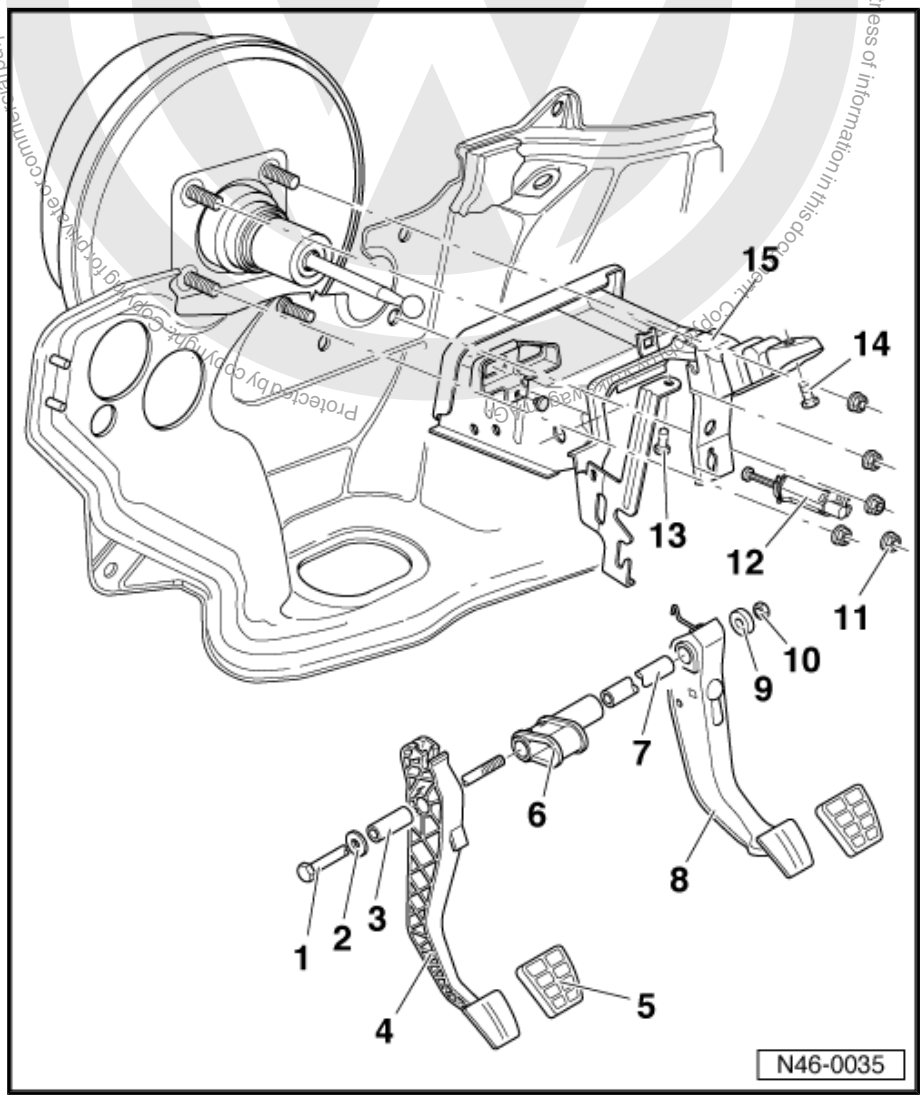

1 - Pivot pin for brake and clutch pedals

2 - Washer

3 - Mounting bush for clutch pedal

4 - Clutch pedal

- ❑ Removing and installing ⇒ 5-speed manual gearbox 085; Rep. Gr. 30 ; Repairing clutch mechanism

5 - Cap

6 - Bearing bush

- ❑ Supports tube casing

7 - Mounting bush for brake pedal

8 - Brake pedal

9 - Washer

10 - Hexagon nut, 25 Nm

11 - Self-locking hexagon nut, 20 Nm

- ❑ Qty. 4, used to attach brake server

12 - Brake light switch

- ❑ Before installing brake light switch, connect brake pedal to brake servo push rod ⇒ page 79
- ❑ Adjusting brake light switch ⇒ page 80

13 - Hexagon bolt, 25 Nm

14 - Hexagon bolt, 25 Nm

15 - Mounting bracket for brake pedal cluster

7.1 Separating brake pedal from brake servo

Special tools and workshop equipment required

satelettronica

♦ Release tool -T10006 A-

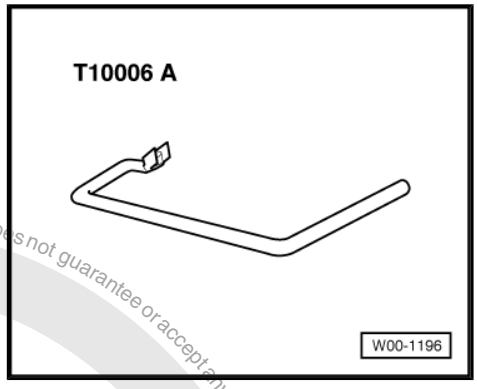

– Remove driver's footwell cover.

– Remove brake light switch.

– First press brake pedal in direction of brake servo and hold.

1 - Brake pedal

2 - Push rod

3 - Mounting

– Insert release tool -T10006 A- and pull towards driver's seat, at the same time holding brake pedal in position (the pedal must not move towards the rear). This will press the retaining lugs -3- of the mounting off the ball head of the push rod -2-.

In order to simplify the illustration, separating the brake pedal from the brake servo is shown with the pedal cluster removed.

– Pull release tool -T10006 A- and brake pedal together towards driver's seat. (This will pull the brake pedal off the ball head of the push rod).

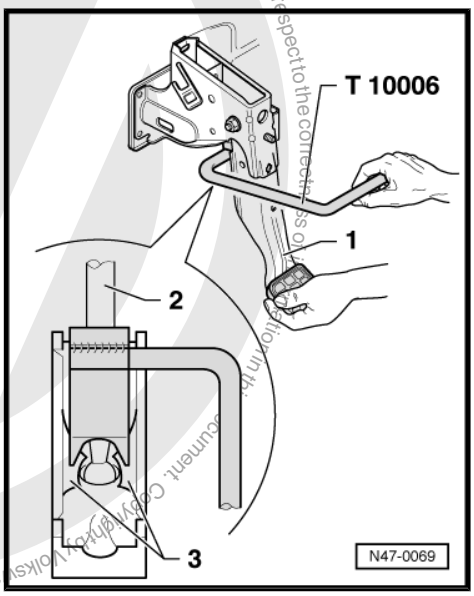

7.1.1 Attaching brake pedal to brake servo

– Hold ball head of push rod in front of mounting and push brake pedal in direction of brake servo, so that the ball head audibly locks into place.

– Adjust brake light switch ⇒ page 80 .

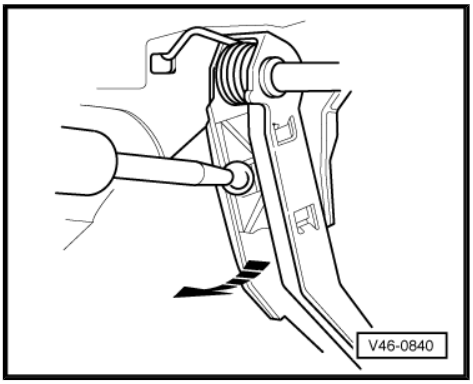

7.2 Removing and installing brake pedal

Lubricate all bearing and contact surfaces using MoS_2 grease.

The foot pedal cluster must be completely removed to remove the brake pedal.

7.2.1 Removing

– Compartment/shelf on driver's side must be removed.

Protected by copyright. Copying for private or commercial purposes, in part or in whole, is not permitted unless authorised by Volkswagen AG. Volkswagen AG does not guarantee or accept any liability with respect to the correctness of information in this document. Copyright by Volkswagen AG.
satelettronica

- Remove brake light switch.
- Unhook clutch cable.
- Unhook accelerator cable.
- Separate brake pedal from brake servo ⇒ page 78 .
- Drill out shear-head bolts for steering.
- Remove hexagon bolts items ⇒ Item 13 (page 78) + ⇒ Item 14 (page 78) , ⇒ Item 13 (page 78) .
- Remove hexagon nuts item ⇒ Item 11 (page 78) , ⇒ Item 11 (page 78) .
- Remove foot pedal cluster.
- Remove hexagon nut item ⇒ Item 10 (page 78) , ⇒ Item 10 (page 78) .
- Pull out pivot pin for brake and clutch pedal.
- Remove brake pedal.

7.2.2 Installing

- Install in reverse order.
- Adjust brake light switch ⇒ page 80 .

7.3 Adjusting brake light switch

The brake light switch must be removed in order to adjust it.

- Pull connector off brake light switch.
- Remove brake light switch by turning 45° or 90° (depending on switch) to left.

7.3.1 Installation of previous version of brake light switch (square)

- Before installing pull plunger out fully.
- Push brake pedal down as far as possible by hand.
- Guide switch through assembly opening and secure by turning 90° to right.
- Release brake pedal.
- Fit brake light switch connector.
- Check function of brake light.

After adjusting the brake light switch check whether the brake pedal is on the limit stop (rest position).

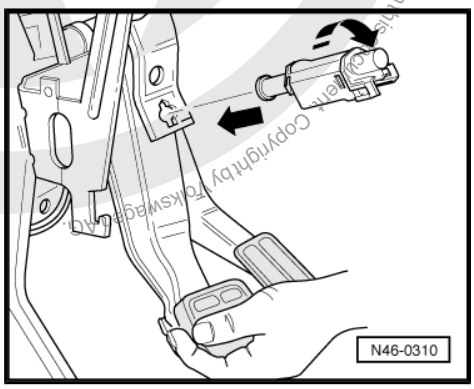

7.3.2 Installation of new version of brake light switch (round)

- Before installing pull plunger out fully.

Protected by copyright. Copying for private or commercial purposes, in part or in whole, is not permitted unless authorised by Volkswagen AG. Volkswagen AG does not guarantee or accept any liability with respect to the correctness of information in this document. Copyright by Volkswagen AG.
satelettronica

– Guide switch through fitting hole, press against pedal and secure by turning 45° clockwise.
– Brake pedal must remain at rest position (not depressed).
– Fit brake light switch connector.
– Check function of brake light.

After adjusting the brake light switch check whether the brake pedal is on the limit stop (rest position).

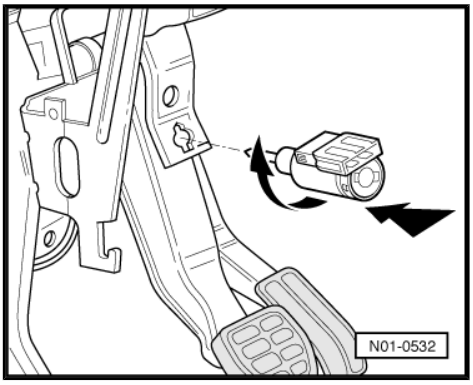

satelettronica

Protected by copyright. Copying for private or commercial purposes, in part or in whole, is not permitted unless authorised by Volkswagen AG. Volkswagen AG does not guarantee or accept any liability with respect to the correctness of information in this document. Copyright by Volkswagen AG.

47 – Brakes - hydraulics

1 Repairing front brake caliper, VW I and VW II brake caliper

- Install complete repair kit when servicing.
- Only use methylated spirits to clean brakes.
- Apply thin coat of assembly paste G 052 150 A2 to brake cylinders, pistons and seals.

1 - Protective cap

- ❑ Do not damage when inserting piston

2 - Piston

- ❑ Removing and installing ⇒ page 82
- ❑ Apply thin coat of assembly paste G 052 150 A2 to piston before inserting

3 - Brake caliper

4 - Seal

- ❑ Removing and installing ⇒ page 82

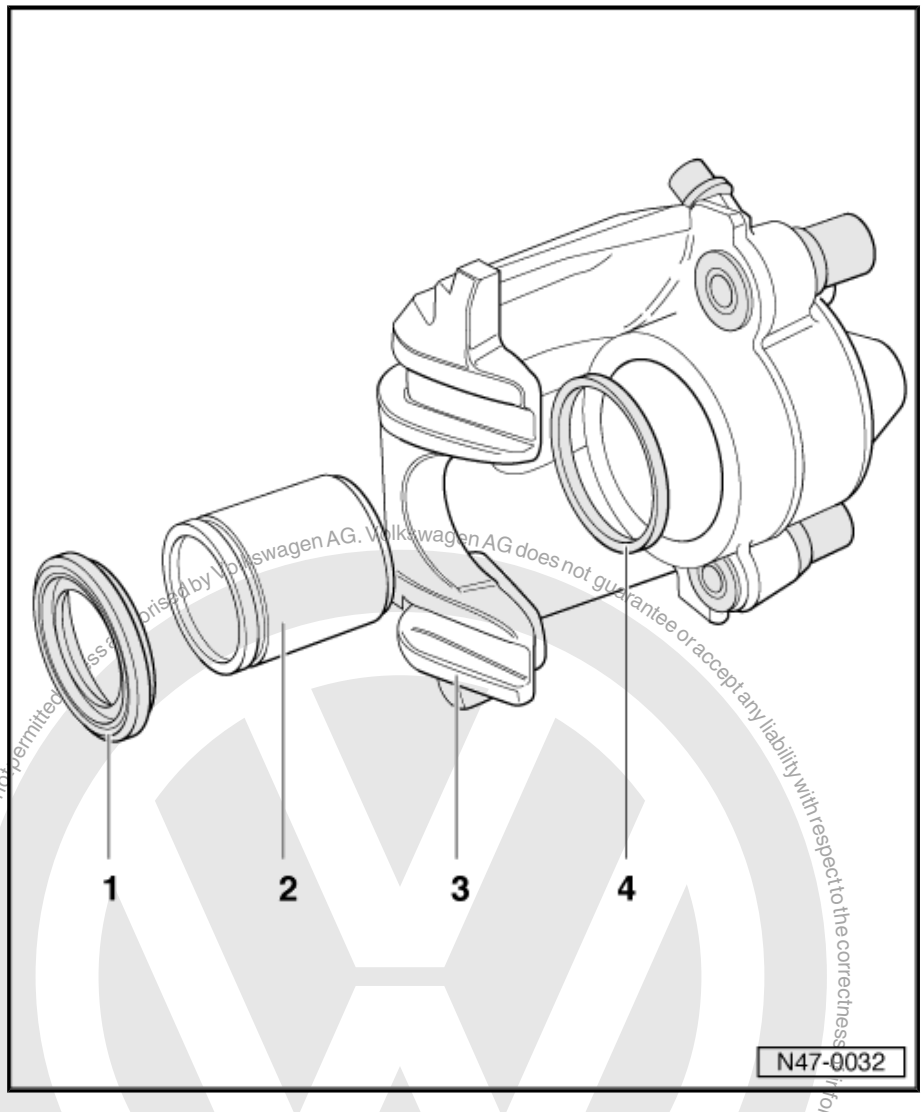

1.1 Removing and installing piston for front brake caliper

Special tools and workshop equipment required

Protected by copyright. Copying for private or commercial purposes, in part or in whole, is not permitted unless authorised by Volkswagen AG. Volkswagen AG does not guarantee or accept any liability with respect to the correctness of information in this document. Copyright by Volkswagen AG.

satelettronica

♦ Removal wedge -3409-

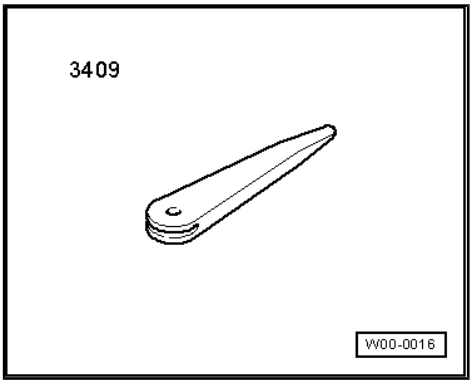

♦ Piston resetting tool -T10145-

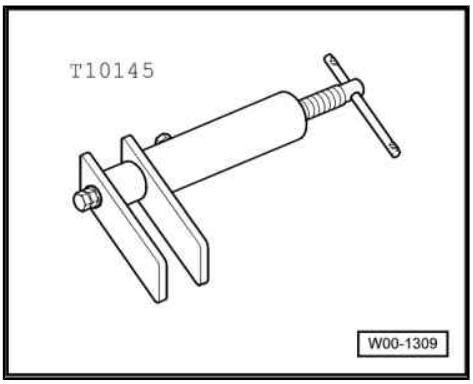

1.1.1 Removing

– Force piston out of brake caliper using compressed air.

Place a piece of wood in the recess to prevent damaging the piston.

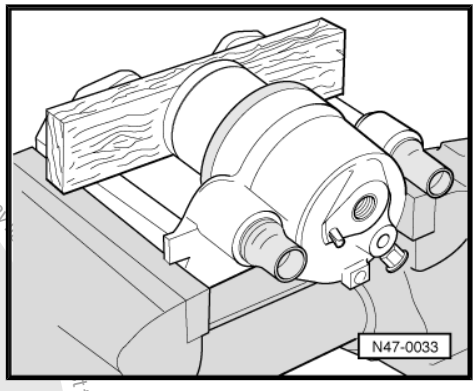

– Remove seal using wedge 3409.

When removing ensure that the surface of the cylinder is not damaged.

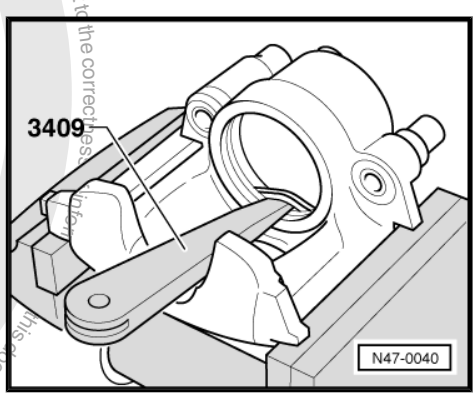

1.1.2 Installing

– The surface of the piston and seal must be cleaned only with methylated spirits and then dried.

– Coat piston and seal thinly with assembly paste G 052 150 A2 before inserting.

satelettronica

– Insert seal in brake caliper.

– Place protective cap with outer sealing lip on piston.

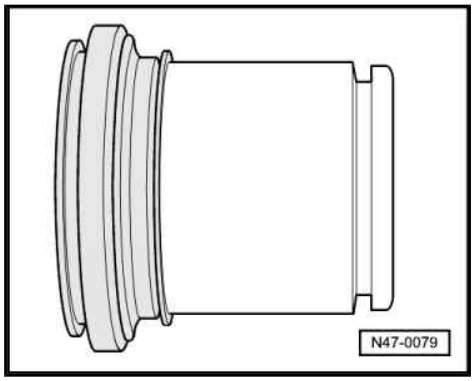

– Insert inner sealing lip into groove in cylinder using wedge 3409.

When doing this hold piston in front of brake caliper.

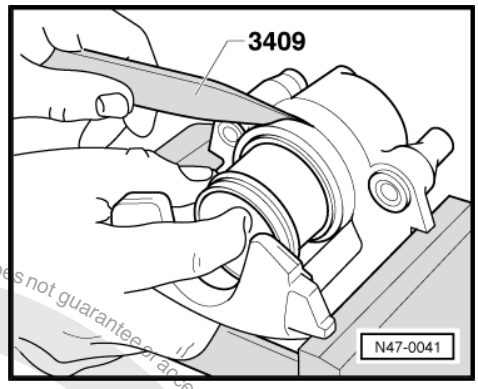

– Press piston into the brake caliper using piston resetting tool.

The outer sealing lip of the protective cap will then lock in the groove on piston.

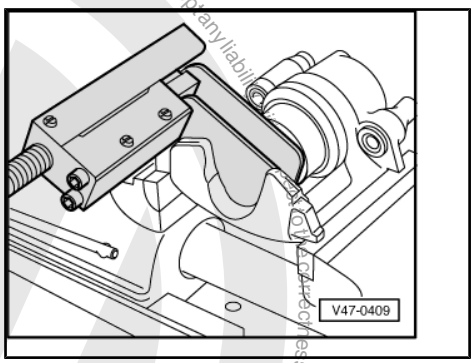

Protected by copyright. Copying for private or commercial purposes, in part or in whole, is not permitted unless authorised by Volkswagen AG. Volkswagen AG does not guarantee or accept any liability with respect to the correctness of information in this document. Copyright by Volkswagen AG.
satelettronica

2 Repairing Girling/Lucas front brake caliper

- When carrying out repairs install all parts supplied in repair kit.
- Only use methylated spirits to clean brakes.
- Apply thin coat of assembly paste G 052 150 A2 to brake cylinders, pistons and seals.

1 - Dust cap

2 - Bleed valve

- ❑ Apply thin coat of assembly paste G 052 150 A2 to threads before screwing in

3 - Brake caliper

4 - Self-locking hexagon bolt, 35 Nm

- ❑ Renew
- ❑ When loosening and tightening, counterhold on guide pin

5 - Seal

- ❑ Removing and installing ⇒ page 85

6 - Piston

- ❑ Removing and installing ⇒ page 85
- ❑ Apply thin coat of assembly paste G 052 150 A2 to piston before inserting

7 - Protective cap

- ❑ Do not damage when inserting piston

8 - Brake carrier with guide pins and protective caps

- ❑ Brake carrier with guide pins and protective caps
- ❑ Replacement carriers are supplied assembled and with sufficient grease on guide pins
- ❑ If protective caps or guide pins are damaged, renew using repair kit. Use grease sachet supplied to lubricate guide pins

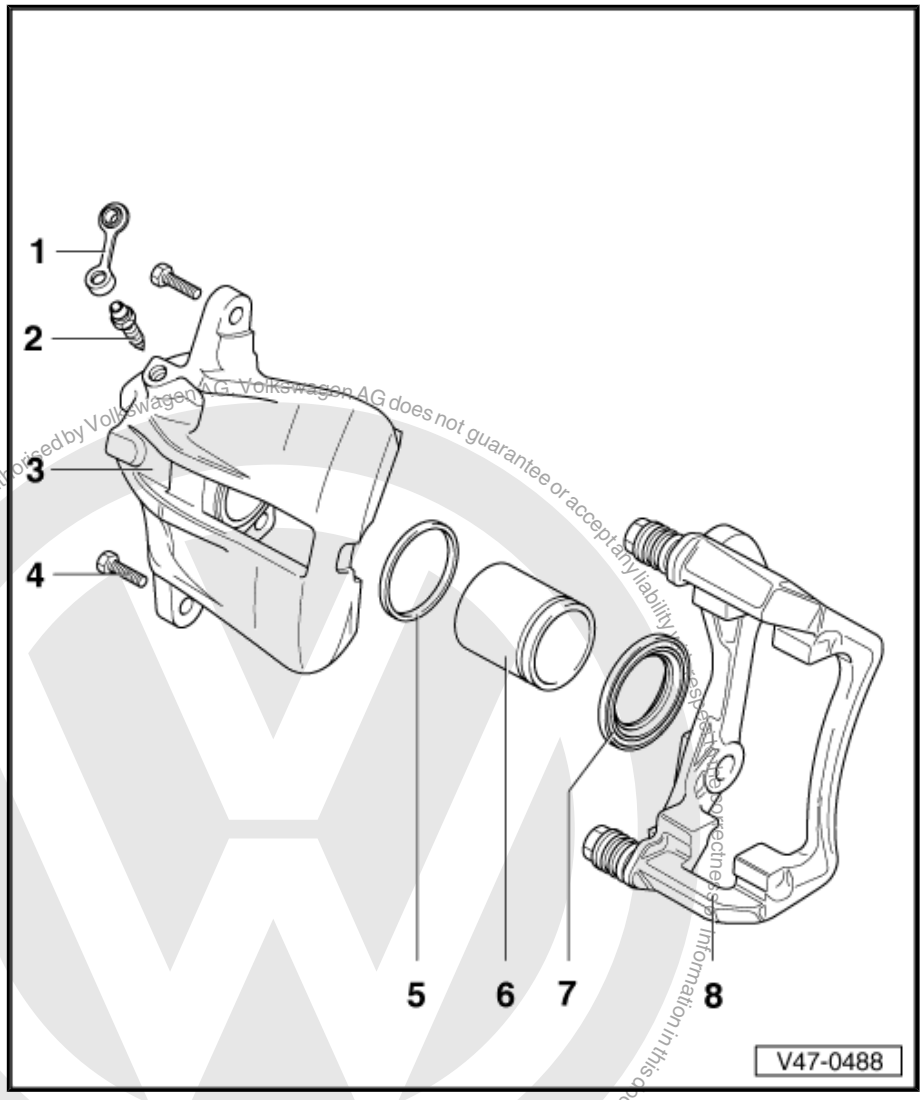

2.1 Removing and installing piston for front brake caliper

Special tools and workshop equipment required

Protected by copyright. Copyright by Volkswagen AG.
Volkswagen AG does not guarantee or accept any liability
satelettronica

Protected by copyright. Copying for private or commercial purposes, in part or in whole, is not permitted unless authorised by Volkswagen AG. Volkswagen AG does not guarantee or accept any liability with respect to the correctness of information in this document. Copyright by Volkswagen AG.

- Removal wedge -3409-

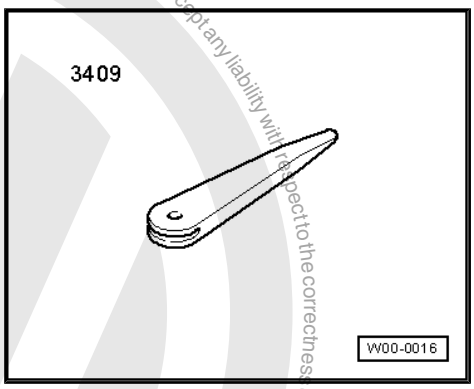

- Piston resetting tool -T10145-

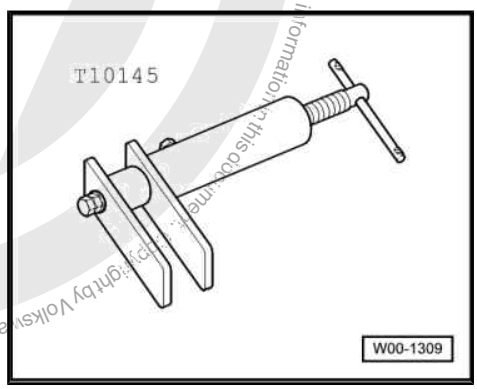

2.1.1 Removing

– Force piston out of brake caliper using compressed air.

Place a piece of wood in the recess to prevent damaging the piston.

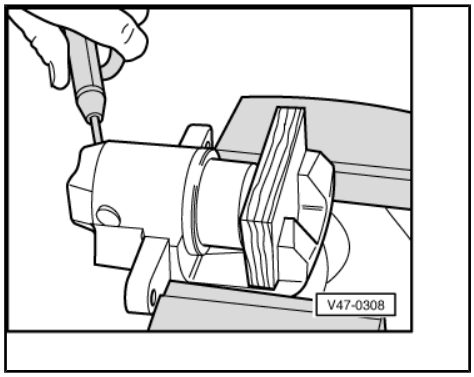

– Remove seal using wedge 3409.

When removing ensure that the surface of the cylinder is not damaged.

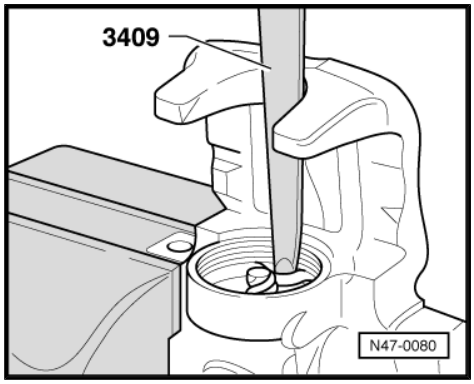

2.1.2 Installing

– The surface of the piston and seal must be cleaned only with methylated spirits and then dried.

– Coat piston and seal thinly with assembly paste G 052 150 A2 before inserting.

satelettronica

– Insert seal in brake caliper.
– Place outer sealing lip of protective cap on the piston

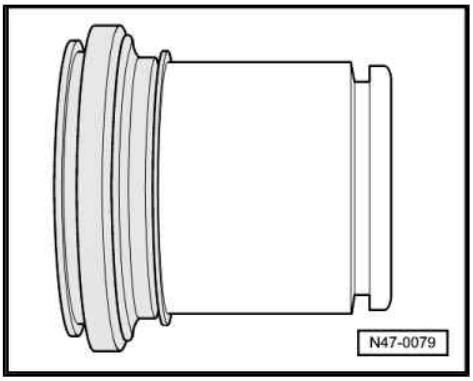

– Insert inner sealing lip into groove in cylinder using wedge 3409.

When doing this hold piston in front of brake caliper.

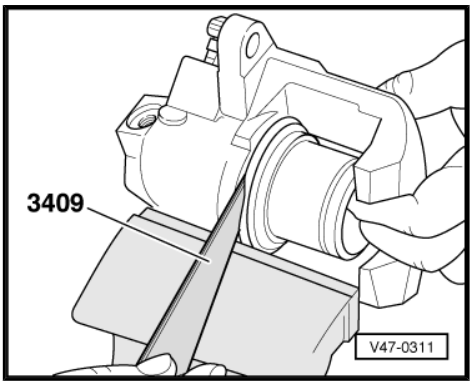

– Press piston into the brake caliper using piston resetting tool.

The outer sealing lip of the protective cap will then lock in the groove on piston.

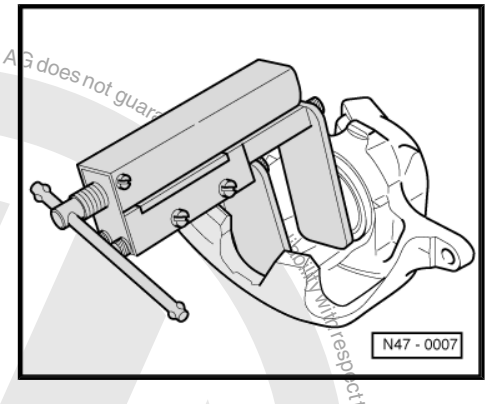

Protected by copyright. Copying for private or commercial purposes, in part or in whole, is not permitted unless authorised by Volkswagen AG. Volkswagen AG does not guarantee or accept any liability with respect to the correctness of information in this document. Copyright by Volkswagen AG.
satelettronica

3 Repairing rear brake caliper

- When carrying out repairs install all parts supplied in repair kit.
- Apply thin coat of assembly paste G 052 150 A2 to brake cylinders, pistons and seals.
- New brake calipers are filled with brake fluid and are pre-bled.
- When repairs are performed, it is essential to appropriately pre-bleed brake calipers (without brake pads) before installing in vehicle ⇒ page 91 .

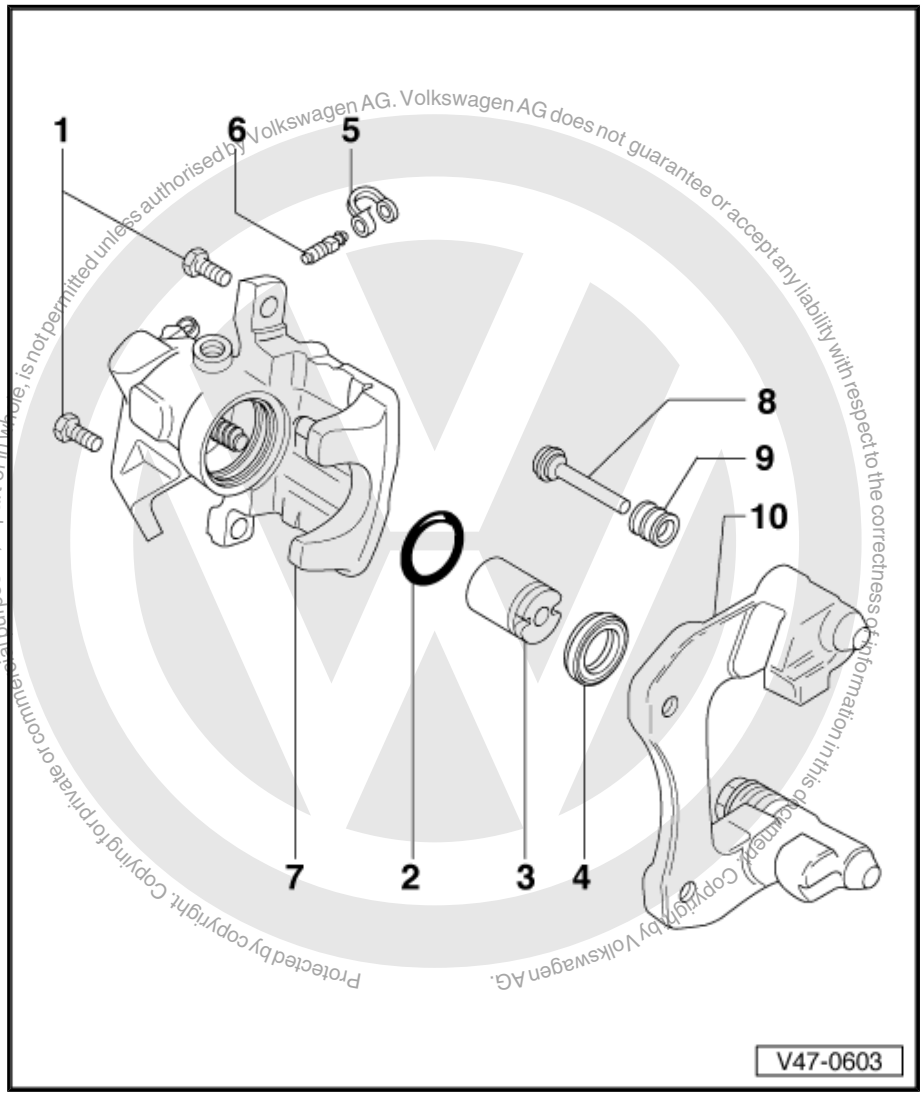

1 - Self-locking bolts, 35 Nm
- ❑ Renew
- ❑ When loosening and tightening, counterhold on guide pin

2 - Seal
- ❑ Removing and installing ⇒ page 89

3 - Piston with automatic adjustment
- ❑ Removing and installing ⇒ page 89
- ❑ Apply thin coat of assembly paste G 052 150 A2 to piston before inserting

4 - Protective cap
- ❑ Pull outer sealing lip onto piston

5 - Dust cap

6 - Bleed valve
- ❑ Apply thin coat of assembly paste G 052 150 A2 to threads before screwing in

7 - Brake caliper with handbrake cable lever
- ❑ If there is a leak at handbrake cable lever, renew brake caliper
- ❑ Following repair work, pre-bleed caliper housing ⇒ page 91

8 - Guide pin
- ❑ Lubricate before installing protective cap

9 - Protective cap
- ❑ Insert onto brake carrier and guide pin

10 - Brake carrier with guide pins and protective caps
- ❑ Replacement carriers are supplied assembled and with sufficient grease on guide pins
- ❑ If protective caps or guide pins are damaged, renew using repair kit. Use grease sachet supplied to lubricate the guide pins

Protected by copyright. Copying for private or commercial purposes, in part or in whole, is not permitted unless authorised by Volkswagen AG. Volkswagen AG does not guarantee or accept any liability with respect to the correctness of information in this document. Copyright by Volkswagen AG.
satelettronica

3.1 Removing and installing piston for rear brake caliper

Special tools and workshop equipment required

- Resetting and removal tool -3272-

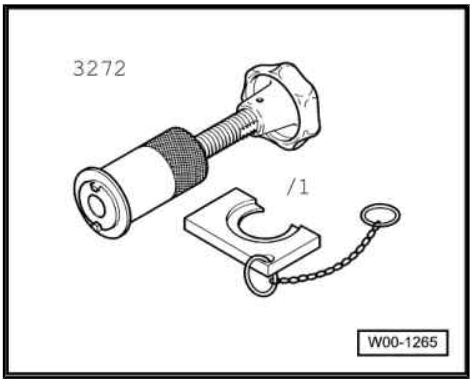

- Removal wedge -3409-

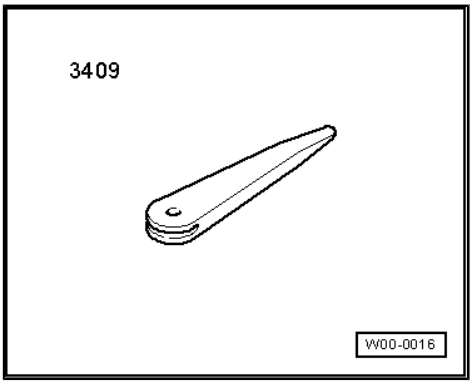

3.1.1 Removing

– Screw piston out of brake caliper by turning knurled wheel anti-clockwise.

- Fit resetting and removal tool 3272 so that the collar -arrow- is positioned against the piston.
- If piston is difficult to move, use a 13 mm open jaw spanner on flats -arrow A- provided for this purpose.

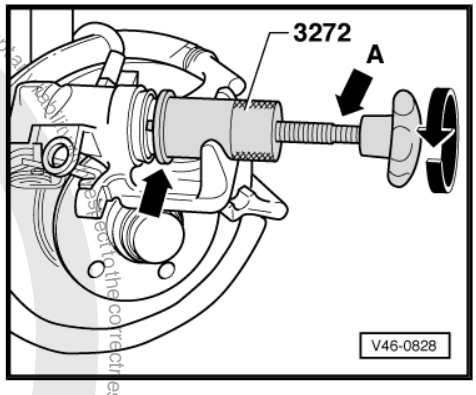

– Remove seal using wedge 3409.

When removing ensure that the surface of the cylinder is not damaged.

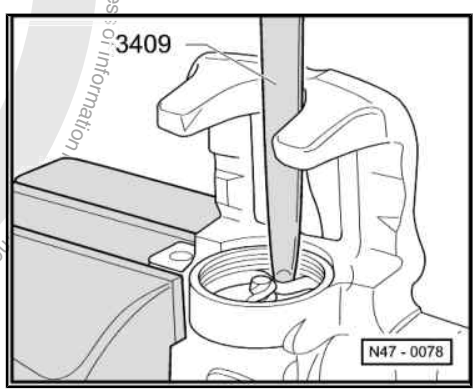

Protected by copyright. Copying for private or commercial purposes, in part or in whole, is not permitted unless authorised by Volkswagen AG. Volkswagen AG does not guarantee or accept any liability with respect to the correctness of information in this document. Copyright by Volkswagen AG.
satelettronica

3.1.2 Installing

– The surface of the piston and seal must be cleaned only with methylated spirits and then dried.

– Coat piston and seal thinly with assembly paste G 052 150 A2 before inserting.

– Insert seal in brake caliper.

– Place outer sealing lip of protective cap on the piston

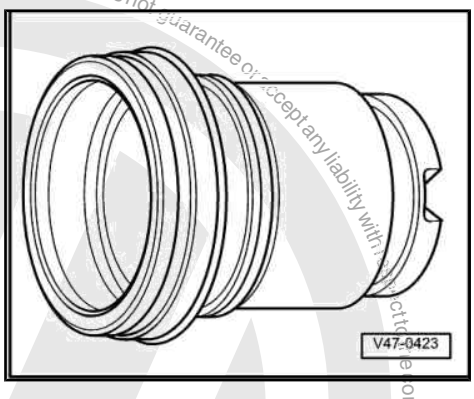

– Insert inner sealing lip into groove in cylinder using wedge 3409.

When doing this hold piston in front of brake caliper.

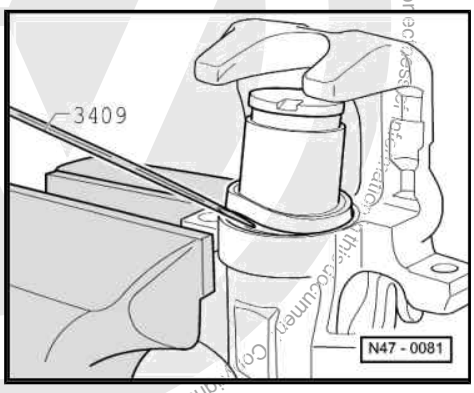

– Screw piston into housing by turning knurled wheel clockwise.

♦ Fit resetting and removal tool 3272 so that collar -arrow- of tool rests on brake caliper.

♦ If piston is difficult to move, use a 13 mm open jaw spanner on flats -arrow A- provided for this purpose.

– Insert brake pads.

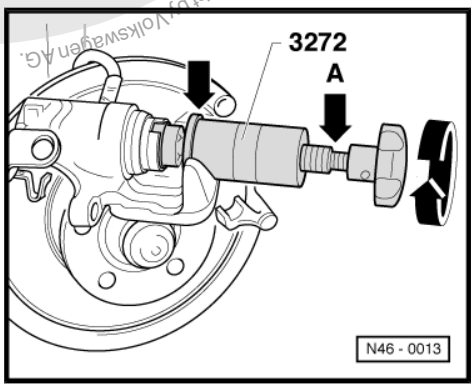

satelettronica

3.1.3 Pre-bleeding brake caliper

– Open bleed valve -arrow A- and, using a standard bleed bottle, fill with brake fluid until bubble-free brake fluid flows from threaded hole of brake hose connection -arrow B-. Close bleed valve.

Position brake caliper as illustrated to pre-bleed.

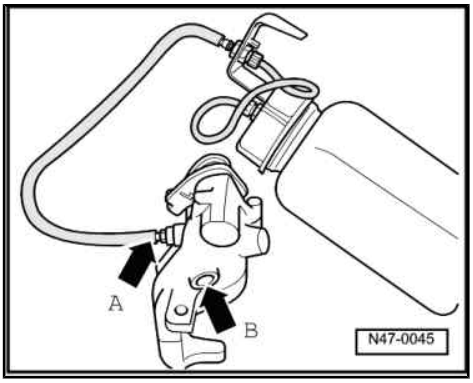

3.2 Pressure leak test

Special tools and workshop equipment required

♦ Brake pressure regulator tester -V.A.G 1310A-

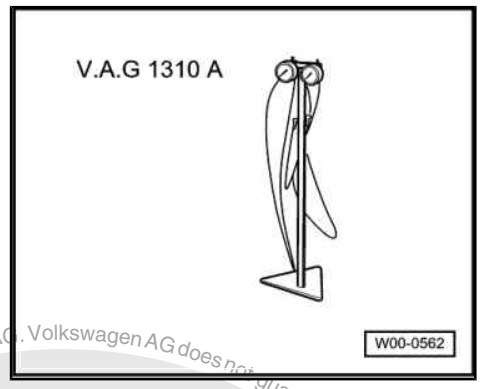

3.2.1 Test prerequisites

Brake system (hydraulic unit, brake hoses, brake lines and brake calipers) operating properly and free of leaks.

– Remove bleed screw at one of front brake calipers. Connect pressure gauge from -V.A.G 1310 A- and bleed.

– Apply pressure to brake pedal until the gauge indicates a pressure of 50 bar. The pressure must not drop by more than 4 bar during the test period of 45 seconds. Renew brake master cylinder if pressure drops greatly.

satelettronica
Protected by copyright. Copying for private or commercial purposes, in part or in whole, is not permitted unless authorised by Volkswagen AG. Volkswagen AG does not guarantee or accept any liability with respect to the correctness of information in this document. Copyright by Volkswagen AG.

4 Assembly overview - brake pressure regulator

1 - Brake pressure regulator
- ❑ Checking and adjusting ⇒ page 93

2 - Hexagon socket head bolt, 20 Nm

3 - Hexagon bolt, 20 Nm

4 - Nut

5 - Mounting bracket

6 - Hexagon bolt, 20 Nm

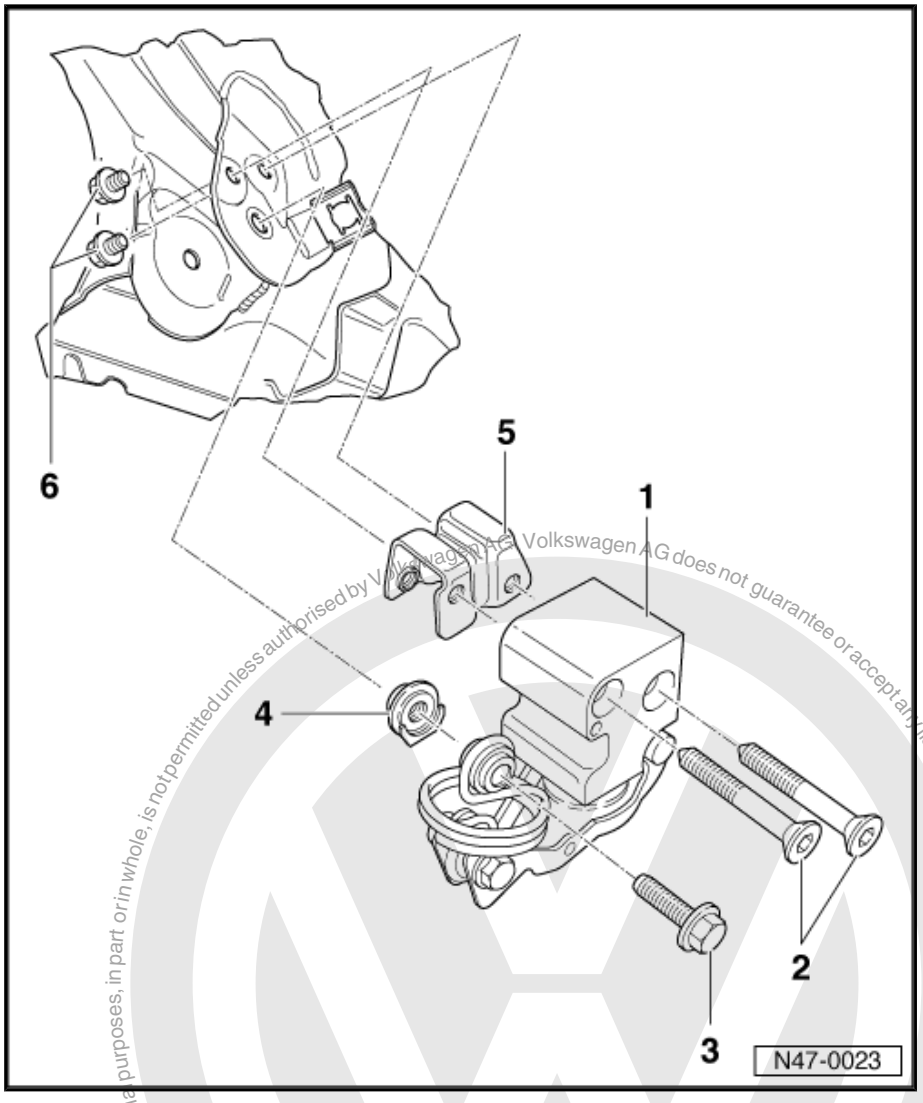

Protected by copyright. Copying for private or commercial purposes, in part or in whole, is not permitted unless authorised by Volkswagen AG. Volkswagen AG does not guarantee or accept any liability with respect to the correctness of information in this document. Copyright by Volkswagen AG.
satelettronica

5 Checking and adjusting brake pressure regulator

Special tools and workshop equipment required

- Brake pressure regulator tester -V.A.G 1310A-

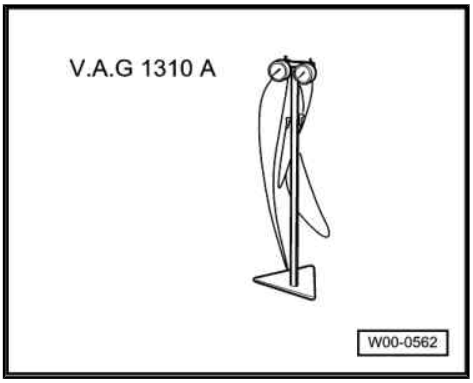

- Adapter M10 -V.A.G 1310/6-
- Adapter M7 -V.A.G 1310/1-
- or
- Adapter M7, 15 mm -V.A.G 1310/2-

Layout:

The brake pressure regulator is mounted on a bracket which is in turn fixed to a rear axle mounting bracket and is controlled from the rear axle by a spring.

Checking function:

Firmly depress brake pedal and release quickly (vehicle standing on its wheels). This must cause the brake pressure regulator lever to move.

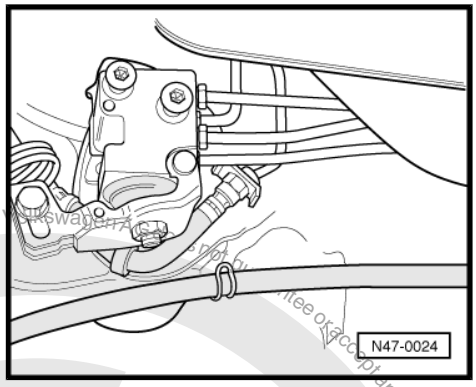

5.1 Checking and adjusting pressure

The brake pressure regulator is adjusted with the vehicle unladened[15].

- Raise vehicle and connect pressure gauges to front left brake caliper and to rear right wheel cylinder/brake caliper.
- Bleed both gauges.
- Lower vehicle and bounce the rear of the vehicle several times.
- Depress brake pedal and measure pressures.
- Compare figures attained with specifications ⇒ page 93 and if necessary adjust.

15) "Unladen" means: the weight of the vehicle ready for the road (full tank, spare wheel, vehicle tools and vehicle jack).

5.2 Load dependent brake pressure regulator specifications

Model / Version		Bar		Bar
Drum brakes on	Front axle	70	Front axle	100

Protected by copyright. Copying for private or commercial purposes, in part or whole, is not permitted unless authorised by Volkswagen AG. Volkswagen AG does not guarantee or accept any liability with respect to the correctness of information in this document. Copyright by Volkswagen AG.
satelettronica

Model / Version		Bar		Bar
Rear axle	Rear axle	35 ... 41	Rear axle	48 ... 54

5.2.1 Adjusting regulator

Rear axle test pressure too high

– Release tension on regulator spring.

Rear axle test pressures too low

– Increase tension on regulator spring.

Do not adjust with brake pedal depressed, therefore observe the following sequence

Read off figures

– Release pedal.

– Adjust spring.

Depress pedal again

– Read off figures and if necessary, readjust.

– Remove pressure gauges and bleed brake system ⇒ page 95 .

Protected by copyright. Copying for private or commercial purposes, in part or in whole, is not permitted unless authorised by Volkswagen AG. Volkswagen AG does not guarantee or accept any liability with respect to the correctness of information in this document. Copyright by Volkswagen AG.
satelettronica

6 Bleeding brake system

Bleeding the brake system is described using brake filling and bleeding unit -VAS 5234- and -V.A.G 1869- .

Note

- *Bleeding the brake system on vehicles with ABS is performed in same way as vehicles with a conventional brake system*
- *On non-ABS vehicles with a brake pressure regulator, move the regulator lever when bleeding rear brakes.*
- *Only use new brake fluid conforming to US standard FMVSS 116 DOT 4.*
- *Genuine VW/Audi brake fluid conforms to this specification.*
- *Brake fluid is poisonous. Also due to its corrosive effect brake fluid must not come into contact with paintwork.*
- *Brake fluid is hygroscopic, which means it absorbs moisture from the ambient air and should therefore always be stored in air tight containers.*
- *Rinse off spillages, by using plenty of water.*

6.1 Bleeding brake system using brake filling and bleeding unit -VAS 5234- or -V.A.G 1869-

Special tools and workshop equipment required

- Brake filling and bleeding unit -VAS 5234-

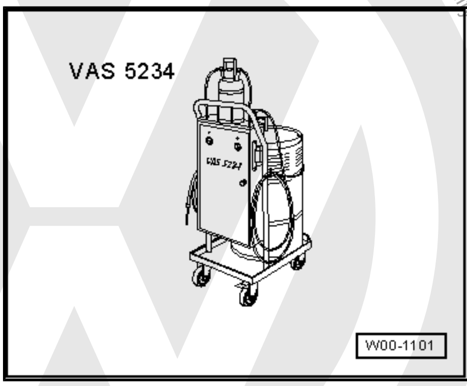

- or
- Brake filling and bleeding unit -V.A.G 1869-
- Upgrade kit for brake filling and bleeding unit -V.A.G 1869/4-

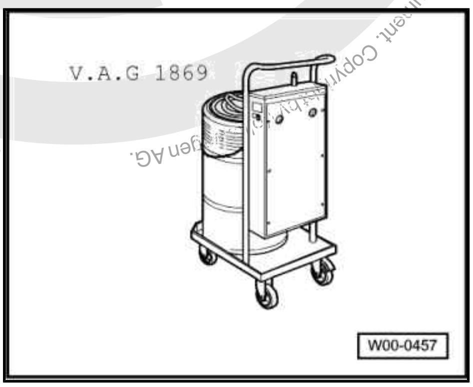

Protected by copyright. Copying for private or commercial purposes, in part or in whole, is not permitted unless authorised by Volkswagen AG. Volkswagen AG does not guarantee or accept any liability with respect to the correctness of information in this document. Copyright by Volkswagen AG.
satelettronica

Note

- *When using brake filling and bleeding unit -V.A.G 1869- to replenish the brake fluid, make sure that filling pressure does not exceed 1 bar.*
- *The brake fluid pressure at the brake filling and bleeding unit -V.A.G 1869- must therefore be reduced to 1 bar. ⇒ Operating instructions -V.A.G 1869-*
- *If the filling pressure exceeds 1 bar it cannot be guaranteed that the hydraulic unit is bled sufficiently.*

Special point regarding vehicles with ABS/EDL

When one chamber in the brake fluid reservoir is completely empty (e.g. leaks in brake system) the hydraulic unit must be bled with fault reader -V.A.G 1551- in function “basic setting”.

⇒ Running gear; Self-diagnosis for ABS; Rep. Gr. 01 ; Performing self-diagnosis; Initiating basic settings .

6.1.1 Breather

Bleeding the brake system on vehicles with ABS is performed in same way as vehicles with a conventional brake system

– Connect brake filling and bleeding unit -V.A.G 1869- .
– Open bleed valves in the specified order and bleed brake calipers and wheel cylinders.

Use suitable bleed hose. It must sit tightly on bleed valve so that no air can enter brake system.

– Leave brake caliper bleed valves open until, with bleed hoses still fitted, brake fluid discharges free of air bubbles.

6.1.2 Bleeding sequence

1 - Rear right wheel cylinder / brake caliper

2 - Rear left wheel cylinder / brake caliper

3 - Front right brake caliper

4 - Front left brake caliper

A road test must be carried out after brakes have been bled. When doing this, an ABS regulation must occur at least once!

6.2 Bleeding brake system without brake filling and bleeding unit

– Build-up brake pressure in brake system by pumping the brake pedal.
– Attach bleeder bottle hose and open bleed valve.
– With brake pedal held down, close bleed valve.
– Repeat procedure until no air is present.

Bleeding sequence ⇒ page 96

6.3 Changing brake fluid

⇒ Maintenance ; Booklet 28 ; Work descriptions; Changing brake fluid (every 2 years)

satelettronica

7 Assembly overview - brake servo/ brake master cylinder

Brake master cylinders and brake servos from different manufacturers are installed. Complete master cylinders and brake servos can be replaced independently of each other.

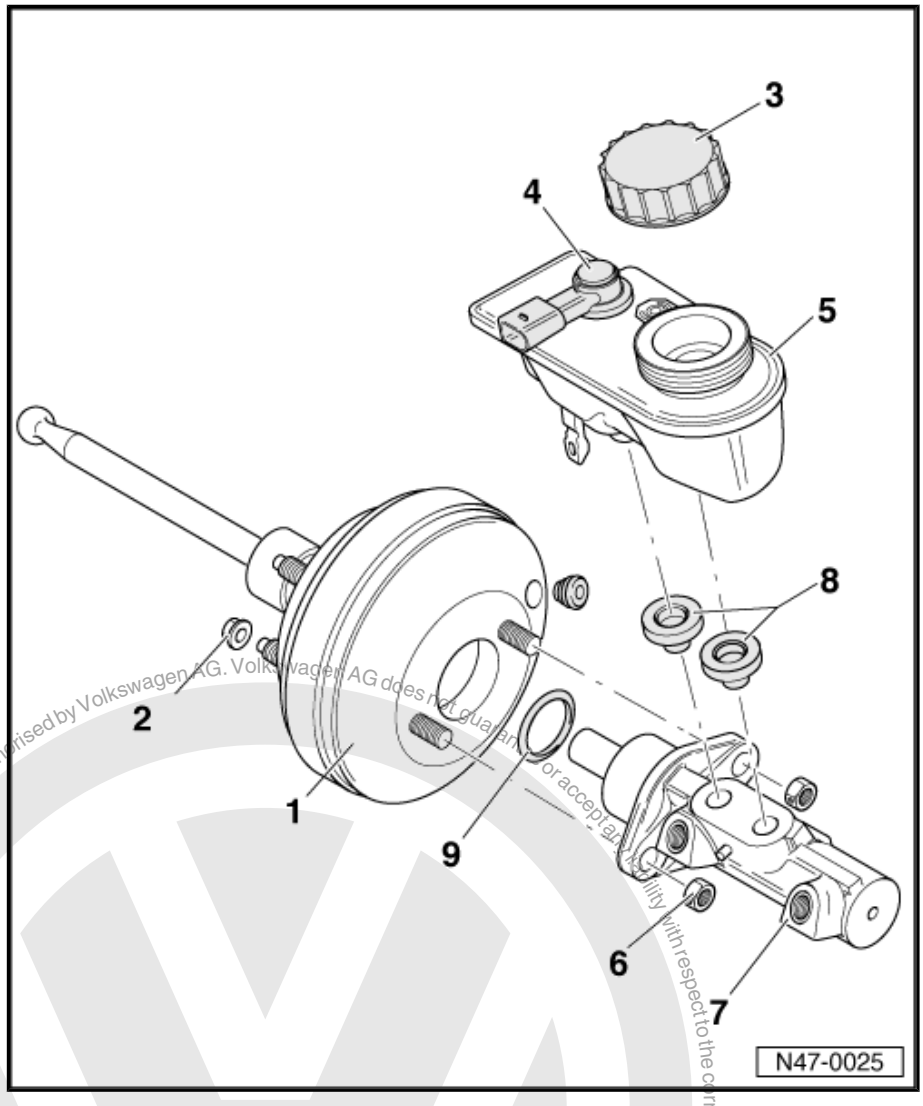

1 - Brake servo

- ❑ On petrol engines the vacuum required is taken from the intake manifold
- ❑ On diesel engines a vacuum pump is installed to create the required vacuum ⇒ page 98
- ❑ Functional check:
  - With engine switched off, depress brake pedal firmly several times (to exhaust the vacuum in the unit)
  - Then hold brake pedal in applied position employing moderate force and start engine. If the servo unit is working properly, the pedal will give slightly under foot (servo assistance becomes activated)
- ❑ Separating from brake pedal ⇒ page 78
- ❑ Non-return valve (in vacuum hose) ⇒ page 99

Functional check:

- You should be able to blow air through the valve in the direction of the arrow
- The valve must not allow anything to pass in the opposite direction of the arrow

Protected by copyright. Copyright for private or commercial purposes, in part or in whole, is not permitted unless authorised by Volkswagen AG. Volkswagen AG does not guarantee or accept any liability with respect to the correctness of information in this document. Copyright by Volkswagen AG.
satelettronica

2 - Self-locking hexagon nut, 20 Nm

3 - Cap

4 - Brake fluid warning level contact

5 - Brake fluid reservoir

6 - Self-locking hexagon nut, 20 Nm

7 - Brake master cylinder

- ❑ Cannot be repaired. If faulty, renew complete

8 - Sealing plug

- ❑ Moisten with brake fluid and press into reservoir

9 - Seal

- ❑ Renew

7.1 Removing and installing vacuum pump for brake servo (diesel vehicles)

Removing

– Disconnect connectors -A- and -B- and pull them out of wiring harness retainer -C-.

– Remove wiring harness retainer -arrows C-.

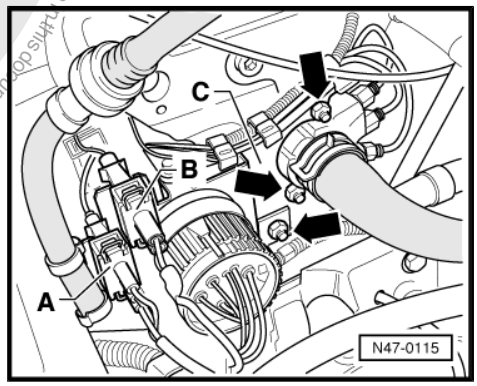

– Loosen vacuum hose securing clamp -arrow A- and pull hose off.

– Unscrew bolt -arrow B- and remove bracket for vacuum pump.

– Remove vacuum pump.

Sealing vacuum pump

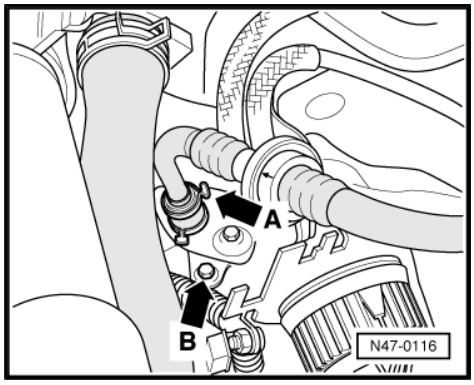

Protected by copyright. Copying for private or commercial purposes, in part or in whole, is not permitted unless authorised by Volkswagen AG. Volkswagen AG does not guarantee or accept any liability with respect to the correctness of information in this document. Copyright by Volkswagen AG.
satelettronica

The vacuum pump cannot be repaired.

1 - Hexagon bolt

2 - Cover

3 - 0-Ring

- Renew

4 - Exhauster pump

5 - 0-Ring

- Renew

6 - Hexagon bolt, 20 Nm

7 - Bracket

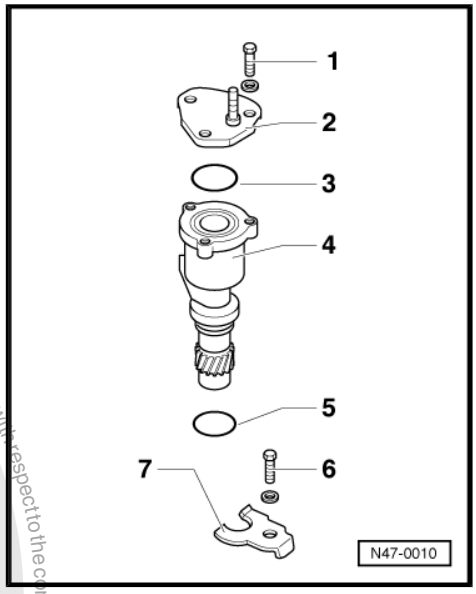

Installing

When inserting the vacuum pump, ensure that the drive engages correctly. The shoulder of the vacuum pump must lie on the crankcase.

– Install bracket for vacuum pump and tighten bolt -arrow B-.

– Reconnect vacuum pump hose and tighten clamp -arrow A-.

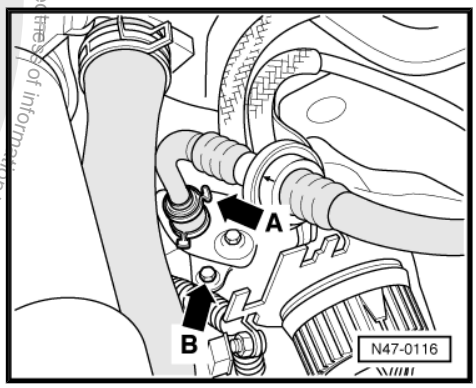

7.2 Checking non-return valve

– Check non-return valve -A-.

Air must pass through valve in direction of arrow.

Valve must remain closed in opposite direction.

Observe correct installation position.

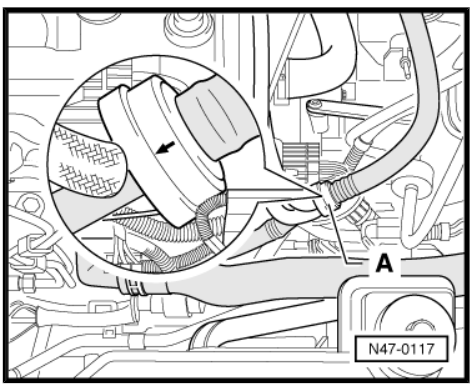

satelettronica

8 Assembly overview - brake master cylinder/brake servo for vehicles with ABS/EDL/TCS/ESP

Complete master cylinders and brake servos can be replaced independently of each other.

1 - Brake servo

- ❑ With wiring harness and brake pressure senders -items
  ⇒ Item 11 (page 101)
  and
  ⇒ Item 13 (page 101) -
- ❑ On petrol engines the vacuum required is taken from the intake manifold
- ❑ On diesel engines a vacuum pump is installed to create the required vacuum
  ⇒ page 98
- ❑ Functional check:
  - With engine switched off, depress brake pedal firmly several times (to exhaust the vacuum in the unit)
  - Then hold brake pedal in applied position employing moderate force and start engine. If the servo unit is working properly, the pedal will give slightly under foot (servo assistance becomes activated)
- ❑ If faulty renew complete
- ❑ Separating from brake pedal ⇒ page 78
- ❑ Non-return valve (in vacuum hose)
  ⇒ page 99

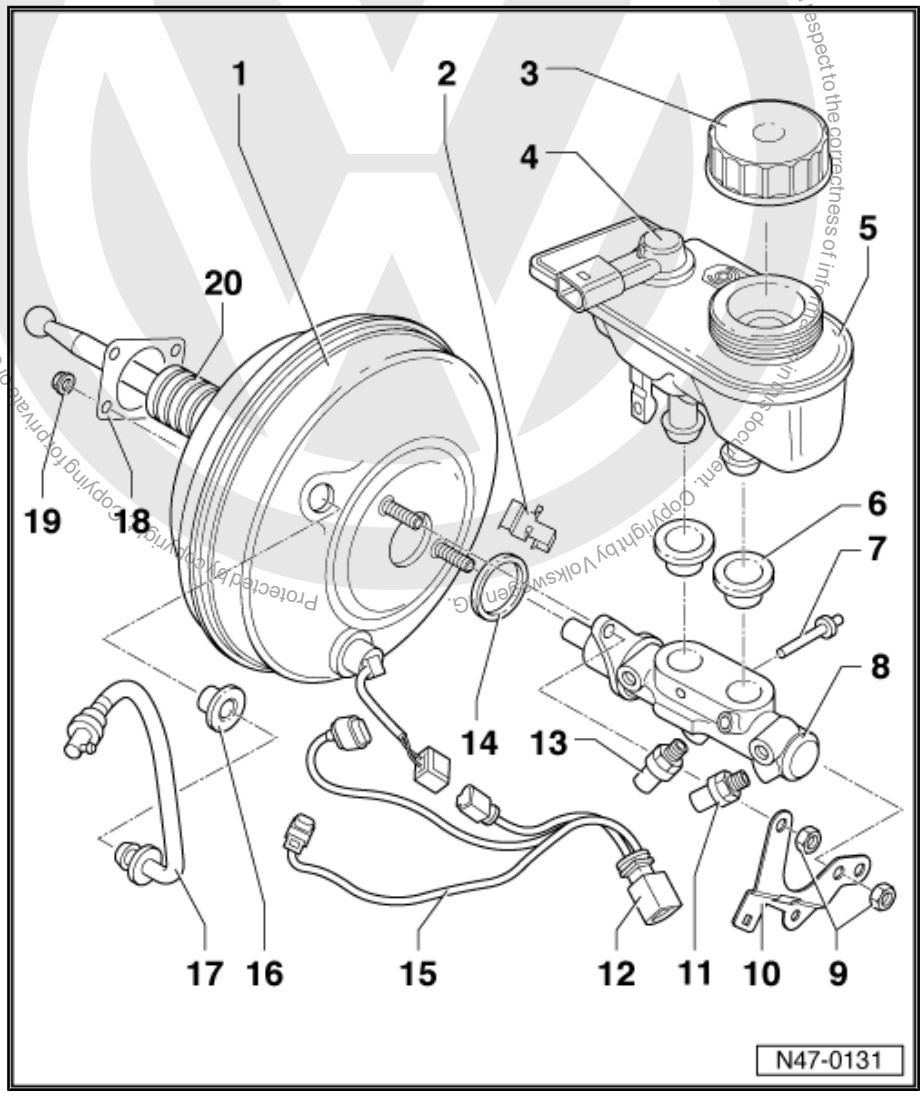

Functional check:

- You should be able to blow air through the valve in the direction of the arrow
- The valve must not allow anything to pass in the opposite direction of the arrow

satelettronica

2 - Mounting

- ❑ Secured to edge of brake servo
- ❑ Used to mount the connector housing -item ⇒ Item 12 (page 101)

3 - Cap

4 - Brake fluid warning level contact

5 - Brake fluid reservoir

6 - Sealing plug

- ❑ Moisten with brake fluid and press into reservoir

7 - Retaining pin

- ❑ Insert through brake master cylinder

8 - Brake master cylinder

- ❑ Must not be repaired. If faulty, renew complete

9 - Self-locking hexagon nut, 20 Nm

10 - Mounting

- ❑ Used to mount the connector housing, wiring harness and brake lines

11 - Brake pressure sender -G201-

- ❑ Removing and installing ⇒ page 101

12 - Connector housing

13 - Brake pressure sender -G214-

- ❑ Removing and installing ⇒ page 101

14 - Seal

- ❑ Renew

15 - Wiring harness

16 - Sealing plug

17 - Vacuum hose

- ❑ Insert into brake servo unit

18 - Seal

- ❑ For brake servo

19 - Self-locking hexagon nut, 20 Nm

20 - Boot

- ❑ Ensure it is seated correctly, danger of suction noises

8.1 Removing and installing brake pressure sender

Location:

The brake pressure sender is located on the brake master cylinder.

8.1.1 Removing

– Note or request radio code on vehicles with coded radio if necessary.

– Disconnect battery

– Lay out sufficient lint free clothes in area of engine and gearbox.

Copyright by Volkswagen AG. Volkswagen AG does not guarantee or accept any liability with respect to the correctness of information in this document. Copyright by Volkswagen AG. Protected by copyright. Copying for private or commercial purposes, in whole or in part, is not permitted unless authorised by Volkswagen AG.
satelettronica

– Draw off as much brake fluid as possible from brake fluid reservoir using a suction bottle.
– Connect bleed bottle hose to front left brake caliper bleed valve and open bleed valve.
– Operate brake pedal at least 15 times so that brake master cylinder empties.
– Close front left bleed valve.
– Pull connector -arrow- off relevant brake pressure sender (the one to be removed).

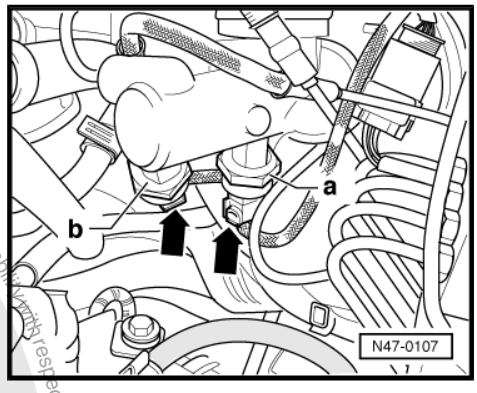

a - Brake pressure sender in primary piston circuit
b - Brake pressure sender in secondary piston circuit
– Remove brake pressure sender.

8.1.2 Installing

– Install in reverse order.

Specified torques

Brake pressure sender	25 Nm

Bleed brake system ⇒ page 95

Afterwards perform basic setting of brake pressure sender.

– Initiate basic setting ⇒ Running gear; Self-diagnosis for ABS; Repair Group 01; Performing self-diagnosis; Initiating basic setting .

Protected by copyright. Copying for private or commercial purposes, in part or in whole, is not permitted unless authorised by Volkswagen AG. Volkswagen AG does not guarantee or accept any liability with respect to the correctness of information in this document. Copyright by Volkswagen AG.
satelettronica

9 Removing and installing brake master cylinder

9.1 Removing

– Note or request radio code on vehicles with coded radio if necessary.

– Disconnect battery

Vehicles with ABS or ABS/EDL

– Remove control unit and hydraulic unit ⇒ page 12 .

Continuation for all vehicles

– Lay out sufficient lint free clothes in area of plenum chamber, engine and gearbox.

– Draw off as much brake fluid as possible from brake fluid reservoir using a suction bottle.

– Pull connector off brake fluid level switch.

– Unscrew brake lines on brake master cylinder and seal brake lines with plugs from repair kit Part No. 1H0 698 311 A.

– Unscrew brake master cylinder nuts.

– Carefully remove brake master cylinder from brake servo.

9.2 Installing

– Install in reverse order.

Observe the following points when installing:

– When fitting together the brake master cylinder and brake servo unit, ensure that the push rod is correctly located in the brake master cylinder.

– After installation, the brake system must be bled ⇒ page 95 .

Vehicles with ABS or ABS/EDL

– Initiate basic settings ⇒ Running gear; Self-diagnosis for ABS; Rep. Gr. 01 ; Performing self-diagnosis; Initiating basic settings .

– Adjust brake light switch ⇒ page 80 .

Protected by copyright. Copying for private or commercial purposes, in part or in whole, is not permitted unless authorised by Volkswagen AG. Volkswagen AG does not guarantee or accept any liability with respect to the correctness of information in this document. Copyright by Volkswagen AG.
satelettronica

10 Removing and installing brake servo

10.1 Removing

– Note or request radio code on vehicles with coded radio if necessary.

– Disconnect battery and remove.

– Pull connector off brake fluid level switch.

– Remove expansion reservoir for coolant, unplug connector and swing to side.

– Disconnect vacuum hose from brake servo.

– Unscrew both retainers -arrows- for clutch cable (danger of accident).

Vehicles with ABS or ABS/EDL

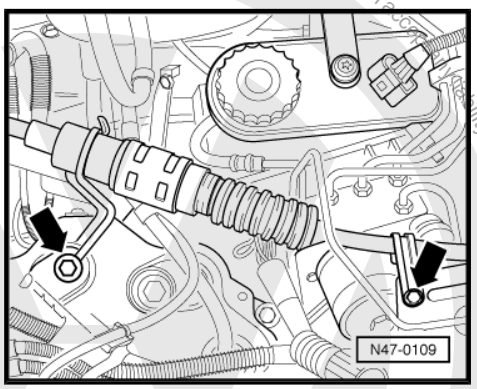

– Open bracket -arrow-, and unclip brake lines.

– Remove control unit and hydraulic unit ⇒ page 12 .

Continuation for all vehicles

– Remove trim below dash panel.

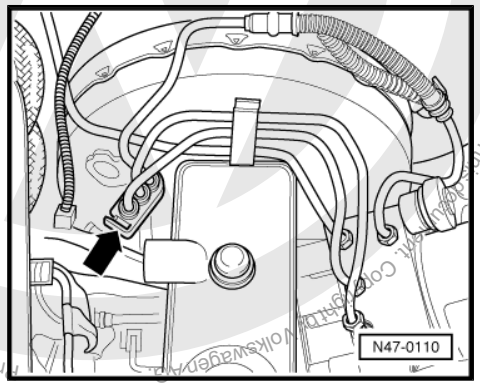

– Remove bolts -1-.

– Remove cover -A-.

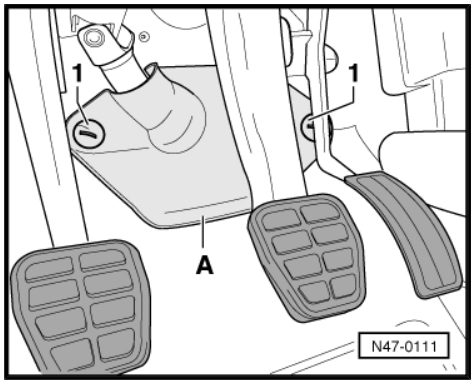

Protected by copyright. Copying for private or commercial purposes, in part or in whole, is not permitted unless authorised by Volkswagen AG. Volkswagen AG does not guarantee or accept any liability with respect to the correctness of information in this document. Copyright by Volkswagen AG.
satelettronica

– Push cover -A- downward.
– Remove brake light switch.
– Separate brake pedal from brake servo ⇒ page 78 .
– Remove brake servo.
– Guide brake servo with brake master cylinder out forwards and remove.

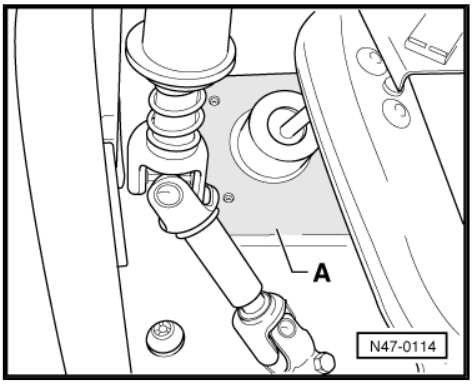

10.2 Installing

Install in reverse order.

– Adjust brake light switch ⇒ page 80 .
– After installation, the brake system must be bled ⇒ page 95 .

Protected by copyright. Copying for private or commercial purposes, in part or in whole, is not permitted unless authorised by Volkswagen AG. Volkswagen AG does not guarantee or accept any liability with respect to the correctness of information in this document. Copyright by Volkswagen AG.

satelettronica